Aussie Pumps

Spare Parts List

IP Cleaning Srl - Professional

Ref: IDAC40282
Cust.Ref: GRIT BLASTER
Model: H.P. CLEANER S.INDY3 D2016T 415/50 AUS
Cust.Model: S.INDY/3 DS2016

Table: CHASSIS & ACC. - IDAC40282

Progressive Number: 1

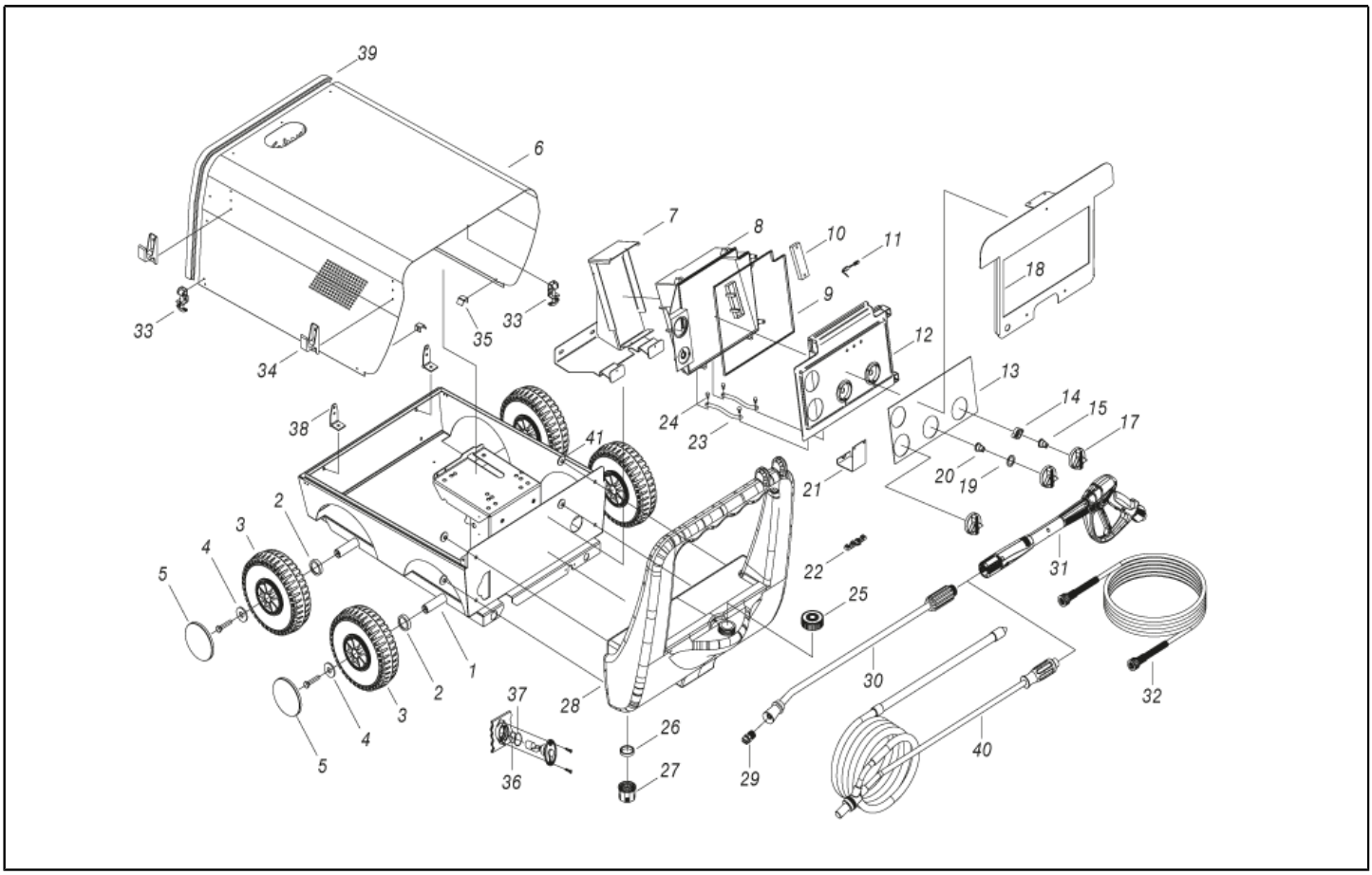

Ref. K	Part N.	Part N. 2	Description	Quantity	Validity From	Validity To
0001	LAFN40404	N/A	CHASSIS S.INDY/3 4W -CP.IX	1,00		31/10/2011
0001	LAFN40465	N/A	CHASSIS S.INDY/3 4W -CP.IX 2V.	1,00	01/11/2011	
0002	VTRS73055	N/A	WASHER D.44x26x4 Z	4,00	12/04/2012	
0003	RTRT40002	N/A	WHEEL D.260 3.00-4 D.25 S.PI.NY	4,00		
0004	VTRS09813	N/A	WASHER D.25	4,00		31/10/2011
0004	VTRS40015	N/A	WASHER D. 9 X44X3,0 ZC.	4,00	01/11/2011	
0005	MPVR28995	N/A	GREY HUB CAP D. 110	4,00		
0006	LAFN40403	N/A	COVER S.INDY/3-30M AUP IX	1,00		31/10/2011
0006	LAFN40467	N/A	COVER S.INDY/3-30M AUP 2V. IX	1,00	01/11/2011	
0007	LAFN40167	N/A	SUPPORT S.INDY/2 CLW. 2V.	1,00		
0008	MPVR40370	N/A	CONTROL BOX S.INDY/2 C/F.THS PP	1,00	01/11/2011	
0008	MPVR89016	N/A	CONTROL BOX S.INDY/2 PP	1,00		31/10/2011
0009	GUGO11309	N/A	JOINT MOUSSE D. 3	1,20		31/05/2023
0009	GUGO40116	N/A	JOINT MOUSSE D. 3,5	1,20	01/06/2023	
0010	MPVR33250	N/A	CABLE CLAMP COV MISTRAL	1,00		
0011	MEVR27264	N/A	FUSE-HOLDER 031-1081	3,00		
0012	MPVR40327	N/A	BOX COVER S.INDY/2-AUS PP	1,00		
0013	ETET89748	N/A	LABEL S.INDY MA-LV. PLC	1,00		
0014	MPVR41903	N/A	THICKNESS TERM.IM.PA66	1,00		
0015	MPVR23484	N/A	TAIL PIECE THERM.KSM TUV	1,00		
0017	MPVR46511	N/A	GREY KNOB KSM C/F.FIS.	3,00		
0018	LAFN40466	N/A	FRAME S.INDY/3 INX	1,00	01/11/2011	
0018	LAFN88653	N/A	FRAME S.INDY/2 INX	1,00		31/10/2011
0019	GUGO23079	N/A	V-SEAL RING VA0014 13.5- 15.5	1,00		
0020	MPVR23482	N/A	TAIL PIECE TEC. TUV	1,00		
0021	LAFN34423	N/A	SUPPORT BRACKET MST.S-P	1,00		
0022	MEVR33994	N/A	CABLE FASTNER 4228 B D. 6- 18	1,00		
0023	MPVR89015	N/A	PLATE S.INDY/2	2,00		
0024	MPVR89160	N/A	PROD D. 7-15 L=15 BK.	4,00		
0025	MPVR40573	N/A	TANK CAP MHDS-SK	1,00		
0026	GUGO11489	N/A	GASKET D.22X1,5	1,00		
0027	PVVR11806	N/A	DISCHARGE CAP FLL	1,00		
0028	MPVR40167	N/A	FUEL TANK S.INDY/2 C/BC. +RT PEHD	1,00		
0029	UGLN49987	N/A	NOZZLE LECH 1/4 15045	1,00	20/04/2006	
0030	LCPR12976	N/A	EXTENSION P 70	1,00	24/07/2014	30/04/2016
0030	LCPR40140	N/A	EXTENSION P 70 -1/4M S/P.UG	1,00	01/05/2016	
0030	LCPR12976	N/A	EXTENSION P 70	1,00		30/11/2016
0030	LCPR40087	N/A	EXTENSION P 70 -P20.IX700 M22 M	1,00	01/12/2016	
0031	IPPR89429	N/A	GRIP G 4500 - P.330 -M22SW.M V	1,00		15/04/2014
0031	IPPR40010	N/A	GRIP G 5100+P.330 +M22 SW.M V	1,00	16/04/2014	29/02/2016
0031	IPPR40020	N/A	GRIP G 6000+P.330 +M22 SW.M V	1,00	01/03/2016	14/06/2018
0031	IPPR40025	N/A	GRIP G 6000+P.330 +M22 SW.M 2V	1,00	15/06/2018	
0032	TBAP40009	N/A	H.P. HOSE R2 MT 10 5/16" C/2 IRV IX	1,00		
0033	CHVR03765	N/A	HOOK L=67	3,00		

Table: CHASSIS & ACC. - IDAC40282

Progressive Number: 1

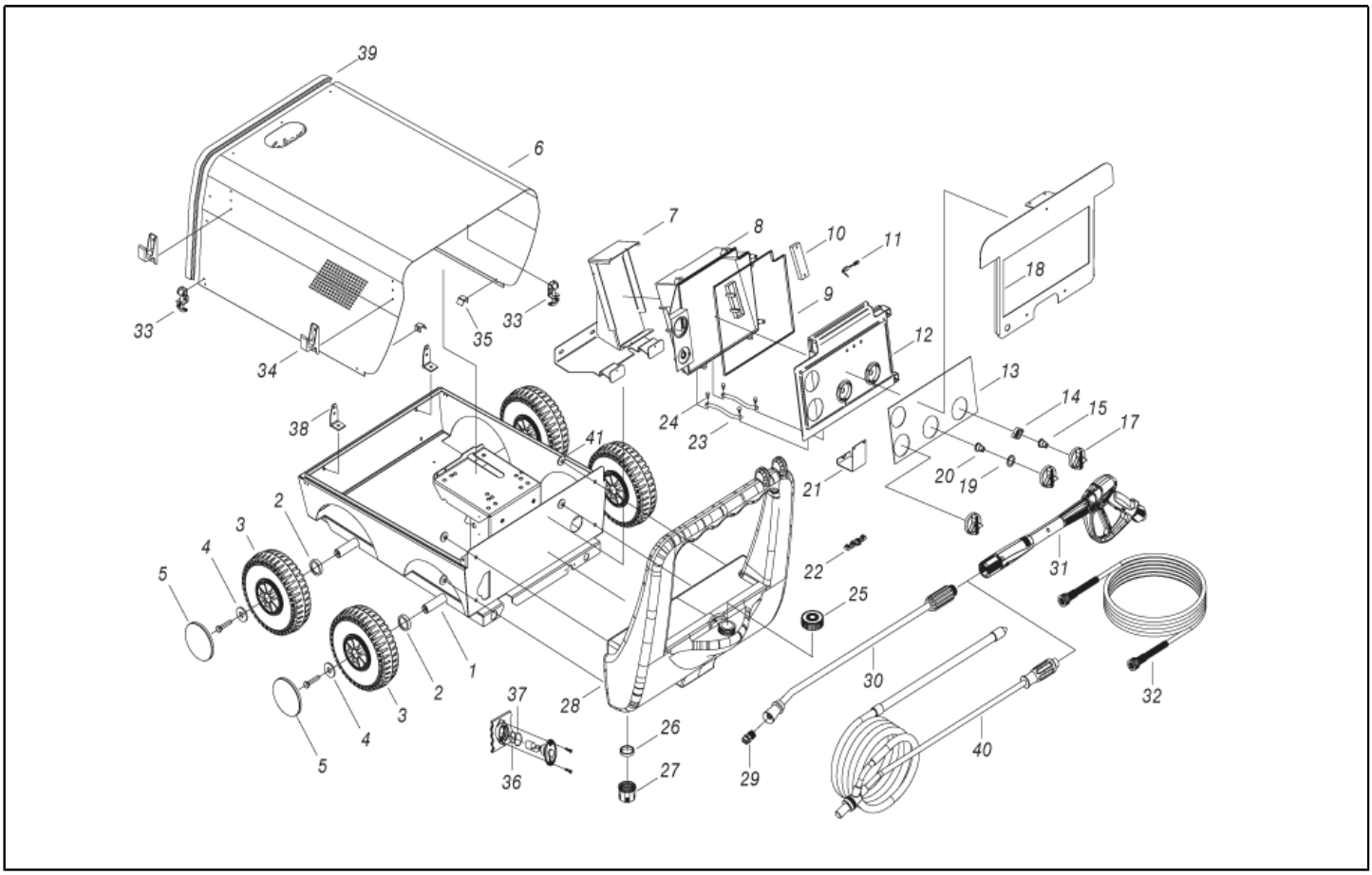

Ref. K	Part N.	Part N. 2	Description	Quantity	Validity From	Validity To
0034	MPVR14947	N/A	LANCE REST NYL 66	2,00	16/05/2011	
0035	LAFN40425	N/A	BRACKET S.INDY/3 IX	4,00	01/11/2011	
0036	GUGO01056	N/A	O-RING D. 18.72 X 2.62 NBR 70SH	1,00		
0037	GUGO01197	N/A	O-RING D. 22.22 X 2.62 NBR 70SH	1,00		
0039	GUVR00408	N/A	EDGE H=14	4,20	12/04/2012	
0040	LCPR14859	N/A	SANDBLASTER P 70 - TST D.1.5	1,00	24/07/2014	
0041	LAFN41338	N/A	BUSHING D. 8.5-25X 4 S.INDY ZC	4,00	01/03/2021	

Table: PUMP MOT.CONNE. - IDAC40282

Progressive Number: 2

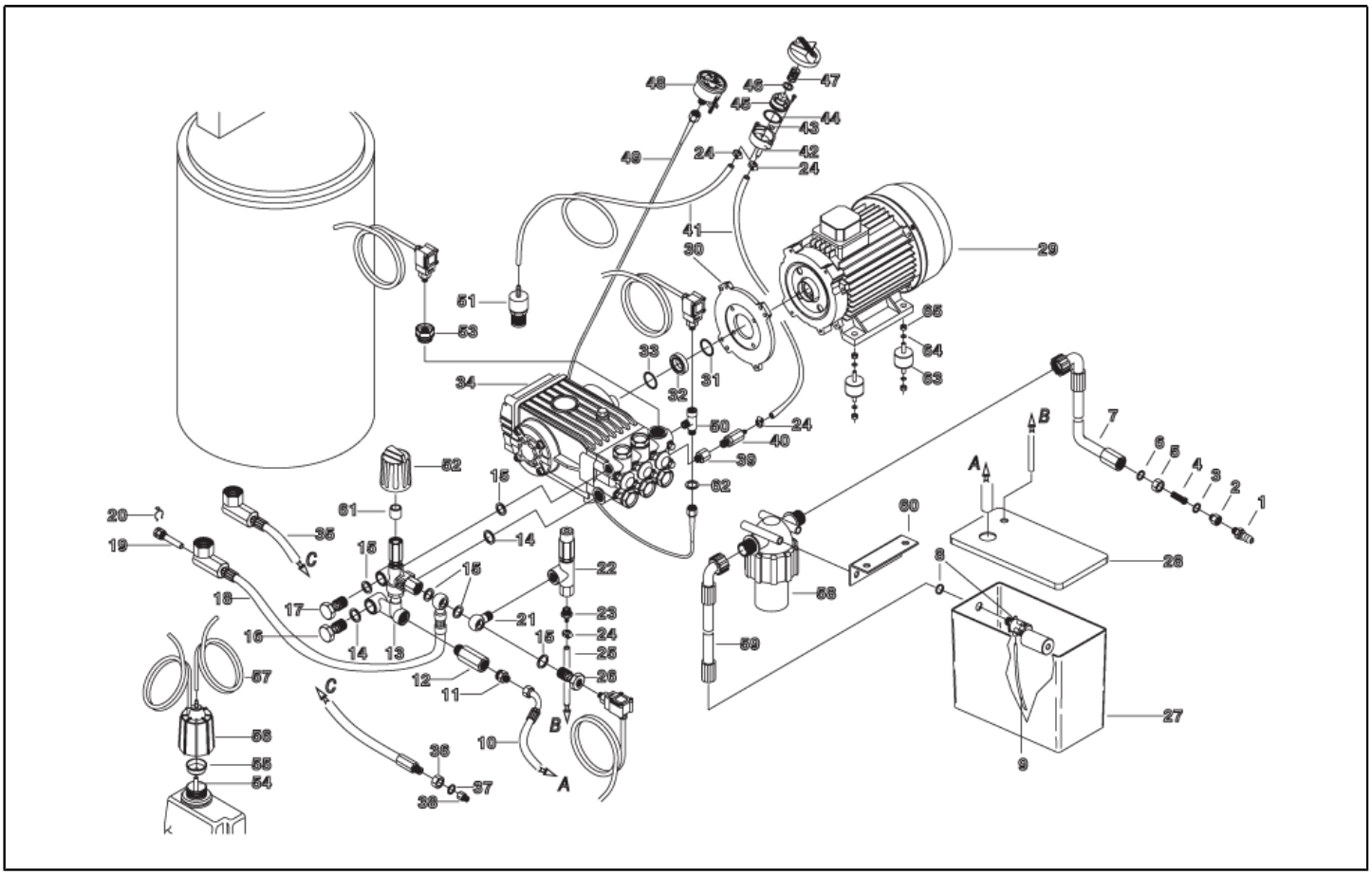

Ref.	K	Part N.	Part N. 2	Description	Quantity	Validity From	Validity To
0001		RCVR29600	N/A	SOCKET PTC 3/4 F	1,00		
0002		RCVR37806	N/A	REDUCTION PTC 3/4-1/2 M/F	1,00		
0003		GUGO37736	N/A	GASKET D. 10- 19 X 5 70SH	1,00		
0004		FTAC30214	N/A	FILTER D.15X67	1,00		
0005		RCDS49875	N/A	RING NUT 1/2"X 6 CH.27 OT.	1,00		
0006		VTRS00549	N/A	WASHER D.21,5X27X1.5 (1/2) RM	1,00		
0007		TBBP46227	N/A	L.P. HOSE L= 650 3/4F 90°- 1/2M	1,00		
0008		GUGO89255	N/A	GASKET D. 17.5-24 X 2 EPDM	1,00	22/06/2005	
0008		RCGR60703	N/A	FLOATER MTM 3/4 PP. S/F.	1,00		
0009		TBBP07631	N/A	L.P. HOSE D.10-14	0,10		
0010		TBBP89300	N/A	L.P. HOSE L=400 3/4F 90° -3/8 45°	1,00		
0011		RCDS87610	N/A	NIPPLE 3/4 - 1/2 CB D.13.0	1,00		
0013		VVAZ40033	N/A	VALVE VRF-2 IP-W AC S/IN.	1,00	01/12/2012	
0013		VVAZ46720	N/A	VALVE MV 625 W151 AC S/IN. REG.	1,00		30/11/2012
0014		VTRS12491	N/A	WASHER 1/2	2,00		30/11/2015
0014		VTRS40027	N/A	WASHER 1/2 ZC + NBR 85SH	2,00	01/12/2015	
0015		VTRS00548	N/A	WASHER D.17,5X23X1,5 (3/8)RM	3,00	12/04/2012	
0015		VTRS12492	N/A	WASHER 3/8	3,00		11/04/2012
0015		VTRS12492	N/A	WASHER 3/8	2,00		30/11/2015
0015		VTRS40026	N/A	WASHER 3/8 ZC + NBR 85SH	2,00	01/12/2015	
0016		RCDS40064	N/A	SCREW G 1/2 L=48.5 INX	1,00		
0017		RCDS40096	N/A	SCREW G 3/8 L=48.5 INX	1,00		
0018		TBAP40095	N/A	HOSE-FITTING 3/ 8 R2 L=800 3/8O-1/2PMG	1,00	01/05/2012	
0018		TBAP49336	N/A	HOSE-FITTING 3/ 8 R2 L=800 3/8O-1/2PMG	1,00		30/04/2012
0019		RCDS00593	N/A	SUMP IM 0-120 L=50	1,00		30/04/2012
0019		RCDS40107	N/A	SUMP GT 0-120 L=65	1,00	01/05/2012	
0020		MLML02623	N/A	SPRING IMT	1,00		
0021		RCDS15150	N/A	CONNECTOR O. 3/8 - G3/8M L=28.5	1,00		
0022		VVSC40005	N/A	VALVE MR 401 G3/8	1,00	20/06/2010	14/10/2021
0022		VVSC40031	N/A	VALVE SVL28 250B. LT.25 G 3/8"	1,00	15/10/2021	
0023		RCDS03514	N/A	HOSE FITTING 3/8 M D. 5- 7	1,00		
0024		FSVR00427	N/A	CLAMP D. 12 CLIC 66-110	2,00		
0025		TBBP04917	N/A	L.P. HOSE D. 6- 9	0,28		30/04/2012
0025		TBBP93804	N/A	L.P. HOSE D. 6- 9	0,28	01/05/2012	
0026		RCDS88103	N/A	SCREW G 3/8 - 1/8F L=55	1,00	24/06/2011	
0027		MPVR61359	N/A	WATER TANK BK C/F.G3/4	1,00		
0028		MPVR48151	N/A	TANK COVER BK FOR.	1,00		
0029		MOTR06345	N/A	3PH MOTOR AC HP 7.5 2/460-5/60 C.ED	1,00	26/05/2011	
0030		MFVR21735	N/A	COUNTERFLANGE MEC 112 2.V	1,00		
0031		GUGO42285	N/A	O-RING D. 35 X 2.5 VIT.70SH	1,00		
0032		RCDS34756	N/A	BUSHING IP W15 OT	1,00		
0034		PPAP42031	N/A	PUMP WS151 DX LT 15 -150B. USA	1,00		
0035	S	RCDS89560	N/A	CONNECTOR IWD/2 M14X1.5 ZC.	1,00	01/11/2011	
0035	S	RCDS21119	N/A	NUT KSM	1,00	01/11/2011	

Table: PUMP MOT.CONNE. - IDAC40282

Progressive Number: 2

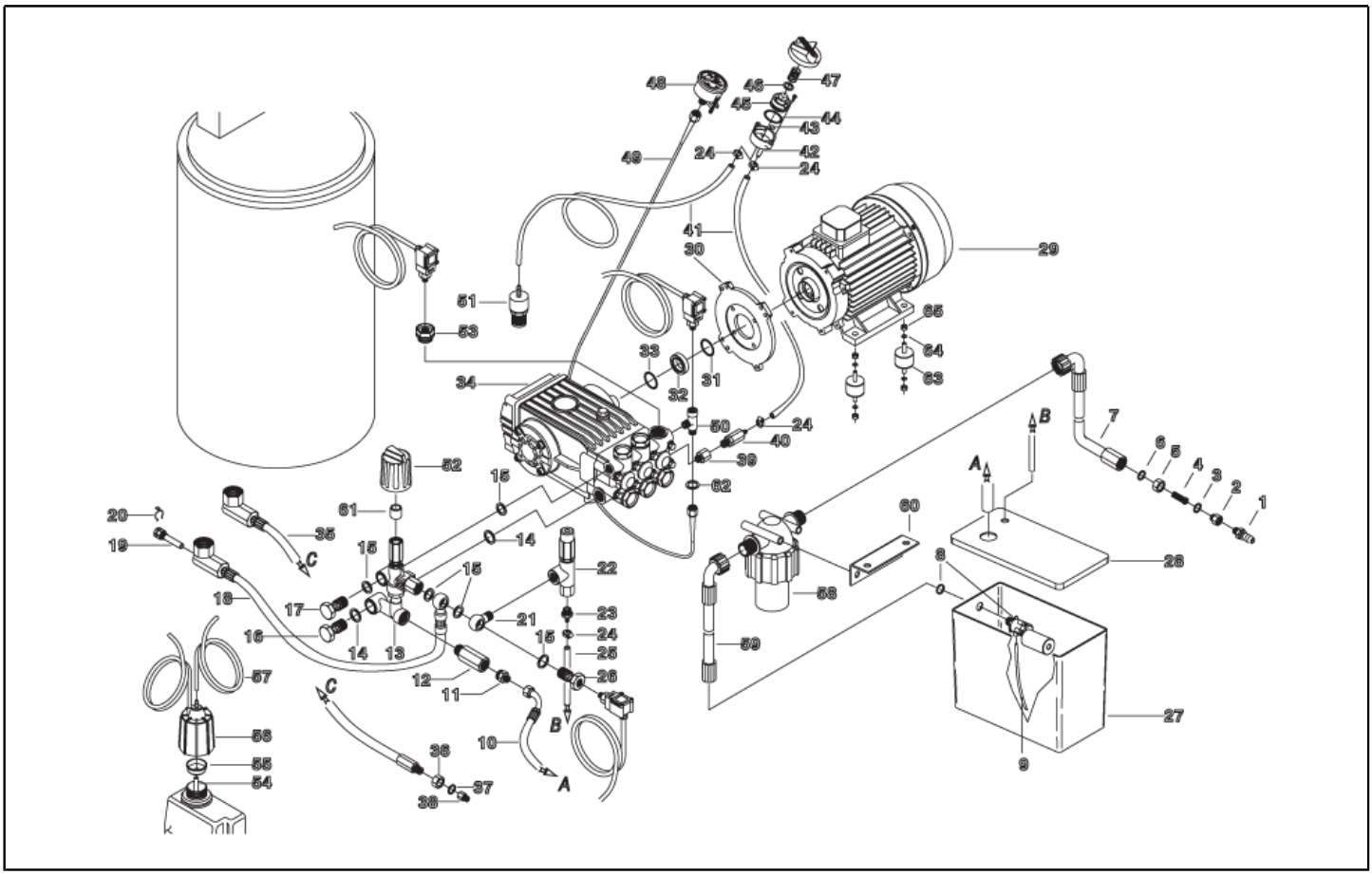

Ref.	K	Part N.	Part N. 2	Description	Quantity	Validity From	Validity To
0035	S	RCDS19322	N/A	BLOC BODY 3/8F-M14	1,00	01/11/2011	
0035	S	RCDS00610	N/A	NIPPLE 3/8 - 3/8 SV	1,00	01/11/2011	
0035	S	TBAP40027	N/A	HOSE-FITTING 3/ 8 R2 L=405 0- 0°-3/8F	1,00	01/11/2011	
0035	S	RCDS40037	N/A	CONNECTOR G 3/8M -3/8F M26X1.5 C.33	1,00	01/11/2011	
0035		TBAP49337	N/A	HOSE-FITTING 3/ 8 R2 L=525 M26+3/8F-P.	1,00		31/10/2011
0036		RCDS21120	N/A	RING NUT M 26 X 1,5	1,00		
0037		VTRS00548	N/A	WASHER D.17,5X23X1,5 (3/8)RM	1,00		
0038		RCIN09348	N/A	MALE COUPLING 3/8MA L=32	1,00		
0039		RCVR02606	N/A	REDUCTION 1/2-1/4 M/F	1,00		
0040		VVSF40013	N/A	VALVE 1/4M -PG. D.3X7.5 INX	1,00	01/11/2011	
0040		VVSF46712	N/A	VALVE 1/4M -PG. D.3X7.5	1,00		31/10/2011
0041		TBBP00051	N/A	DETERGENT HOSE D. 6-12	1,30		
0041		TBBP00051	N/A	DETERGENT HOSE D. 6-12	0,80	21/10/2016	
0042		RCGR08069	N/A	TAP BODY DET. PRT	1,00		
0043		GUGO12183	N/A	O-RING D. 23.4 X 3.53 VIT 70SH	1,00		
0044		GUGO08071	N/A	O-RING D. 4.48 X 1.78 NBR 70SH	1,00		
0045		RCGR08070	N/A	ADJUSTER PRT	1,00		
0046		VTRS00542	N/A	WASHER D.14X20	1,00		
0047		MLML08068	N/A	SPRING D.1,5 L.23	1,00		
0048		MNMN49621	N/A	PRESSURE GAUGE 0-250 D.50 INOX	1,00		
0049		TBAP40007	N/A	POLYAMIDE HOSE L=840 1/4 F-F P.MAN.	1,00		
0050		RCDS40589	N/A	CONNECTOR T 3/8M - 1/4 M/F OT.	1,00		
0051		FTDT04648	N/A	FILTER PG. D.6 PLS	1,00		
0052		MPVR09436	N/A	BLACK KNOB ST 260	1,00		20/06/2014
0052		MPVR40589	N/A	BLACK KNOB ST 260 IPC	1,00	21/06/2014	
0053		RCDS09059	N/A	CAP M24X2X16 + 1/4F OTT	1,00	26/05/2011	
0054		TBBP11756	N/A	L.P. HOSE D. 4- 6 RILSAN NTR	0,22		
0055		MPVR18582	N/A	CAP D.22	2,00	07/04/2011	
0056		MEPD25575	N/A	DESCALING PUMP NME-1 24V CPL.	1,00		
0057		TBBP00058	N/A	L.P. HOSE D. 4- 7	1,00		
0058		FTAC40010	N/A	WATER FILTER 3/4 MM 100MS ARG	1,00		
0059		TBBP88292	N/A	L.P. HOSE L=275 3/4F 90° -15X26	1,00		
0060		LAFN40436	N/A	FILTER BRACKET ARG S.I/3 ZC	1,00		
0061		PVVR40273	N/A	ADAPTER VRF-2 RG.	1,00	01/12/2012	
0062		VTRS40960	N/A	WASHER D.13.5X19 X4 AL.	1,00	19/07/2016	

Table: PUMP MOT.CONNE. - IDAC40282 Progressive Number: 2

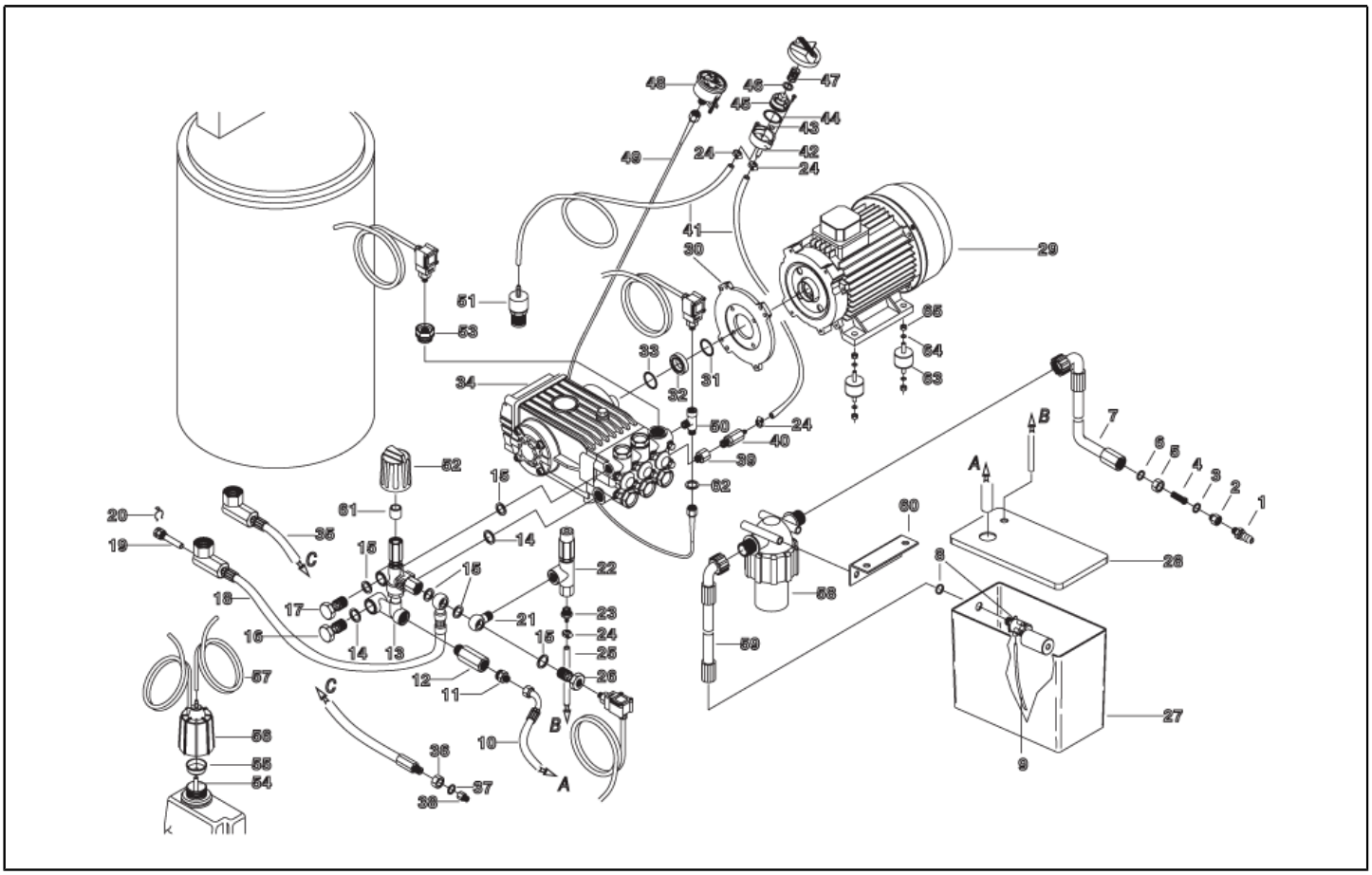

Ref.	Part N.	Part N. 2	Description	Reference
	KTRI40528		KIT P 13- 19 IDY3 AU	0035 0035 0035 0035 0035 0035

Table: BOILER - IDAC40282

Progressive Number: 3

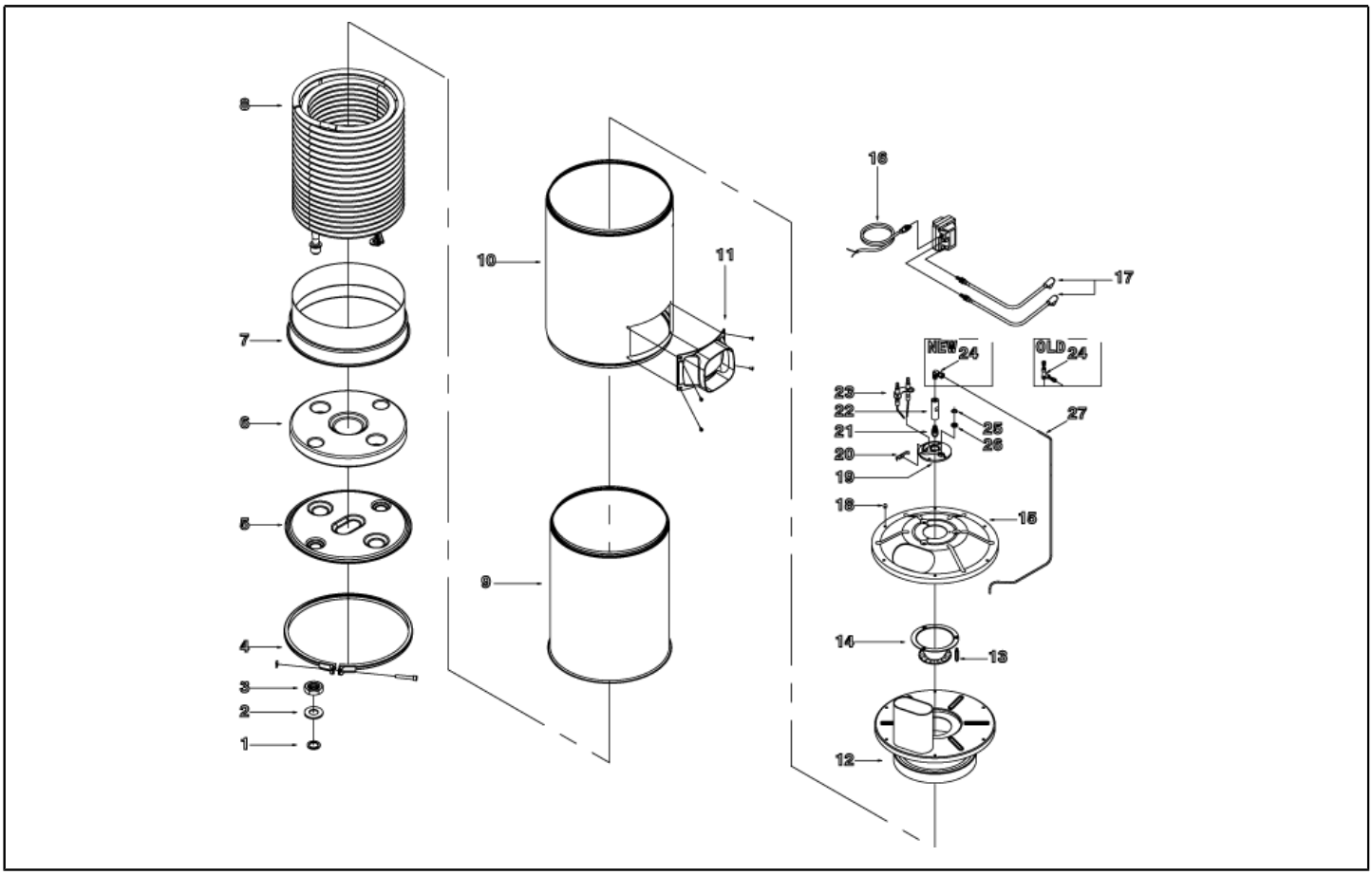

Ref. K	Part N.	Part N. 2	Description	Quantity	Validity From	Validity To
0001	GUGO21222	N/A	O-RING D. 15.54 X 2.62 VIT 80SH	2,00		
0002	GUVR21021	N/A	ANTI-EXTR.RING D. 21 X17 TEF.	2,00		
0003	RCDS21120	N/A	RING NUT M 26 X 1,5	2,00		
0004	LAFN40037	N/A	RING D.342 P176 ZN 2V.CPL.	1,00	01/11/2011	
0005	LAFN44149	N/A	BOILER BOTTOM P176	1,00	01/11/2011	
0006	ITTE44175	N/A	BOTTOM P176 C.TE	1,00	01/11/2011	
0007	LAFN44151	N/A	BAND P176 INX	1,00	01/11/2011	
0008	LAFN88010	N/A	DOUBLE COIL M26X1.5 P176 30M S.2.6 VR	1,00		31/10/2011
0008	LAFN40044	N/A	DOUBLE COIL M26X1.5 P176 30M S.2.9 VR	1,00	01/11/2011	
0009	LASL40101	N/A	INT. CYLINDER PM INX	1,00	01/11/2011	
0009	LAFN46225	N/A	INT. CYLINDER P176 CP.INX	1,00		31/10/2011
0010	LAFN40468	N/A	EXT. CYLINDER PM-AUP INX	1,00	01/11/2011	
0010	LAFN40034	N/A	EXT. CYLINDER P176-FR/2 CP.	1,00		31/10/2011
0011	MPVR40013	N/A	CONVEYOR P176-FBX PA6 BK.	1,00	17/07/2020	
0012	LAFN44146	N/A	BOILER COVER SI P176 INX	1,00		31/10/2011
0012	LAFN40269	N/A	BOILER COVER SI PM INX	1,00	01/11/2011	
0013	LAFN44159	N/A	PIN CH.10 X 75.7 M5M/M5M P176	3,00	15/05/2007	31/10/2011
0013	LAFN40271	N/A	PIN CH.10 X 67.7 M5M/M5M PM	3,00	01/11/2011	
0014	LAFN44244	N/A	BAFFLE P176 30M INX	1,00	01/11/2011	
0015	LAFN44148	N/A	BOILER COVER SE P176 INX	1,00		31/10/2011
0015	LAFN40270	N/A	BOILER COVER SE PM INX	1,00	01/11/2011	
0016	MECB89638	N/A	CABLE BT L=1000 SP.	1,00		
0017	MECV35336	N/A	CABLE A.T. 9,8-23KOHM/M L= 750P	2,00		
0018	VTDD05907	N/A	NUT M 6 CIE.	3,00	01/11/2011	
0019	MFVR18226	N/A	ELECTR.HOLDER FUT 3°V	1,00	01/11/2011	
0019	MFVR44251	N/A	ELECTR.HOLDER P176	1,00		31/10/2011
0020	LAFN07641	N/A	PLATE INX	1,00	01/11/2011	
0021	UGBR22576	N/A	BURNER NOZZLE 1.35 60 S	1,00	01/11/2011	
0022	RCDS07642	N/A	NOZZLE HOLDER FUT	1,00	01/11/2011	
0023	MECA12525	N/A	ELECTRODE FUT	1,00	01/11/2011	
0024	RCVR08954	N/A	ELBOW 1/8"-4 B5	1,00	01/11/2011	30/06/2013
0024	RCVR14014	N/A	BI-CONE CONNEC. DTT 1/8"M B1 D. 2/ 4 NIK	1,00	01/07/2013	31/10/2013
0024	RCVR72867	N/A	CONNECTOR A "T" 1/8" FFM	1,00	01/07/2013	31/10/2013
0024	RCVR08954	N/A	ELBOW 1/8"-4 B5	1,00	01/03/2015	
0024	RCVR40126	N/A	BI-CONE CONNEC. T 1/8"M/F D. 4/ 6C NK.	1,00	01/11/2013	28/02/2015
0024	RCVR89230	N/A	CAP G 1/8 M C/O-RING.	1,00	01/07/2013	28/02/2015
0025	VTAE22633	N/A	SEEGER 0.4 X18,30X10,5	1,00	01/11/2011	
0026	MPVR18228	N/A	OIL WARN-LIGHT D.17 X3	1,00	01/11/2011	

Table: VENTILATOR - IDAC40282

Progressive Number: 4

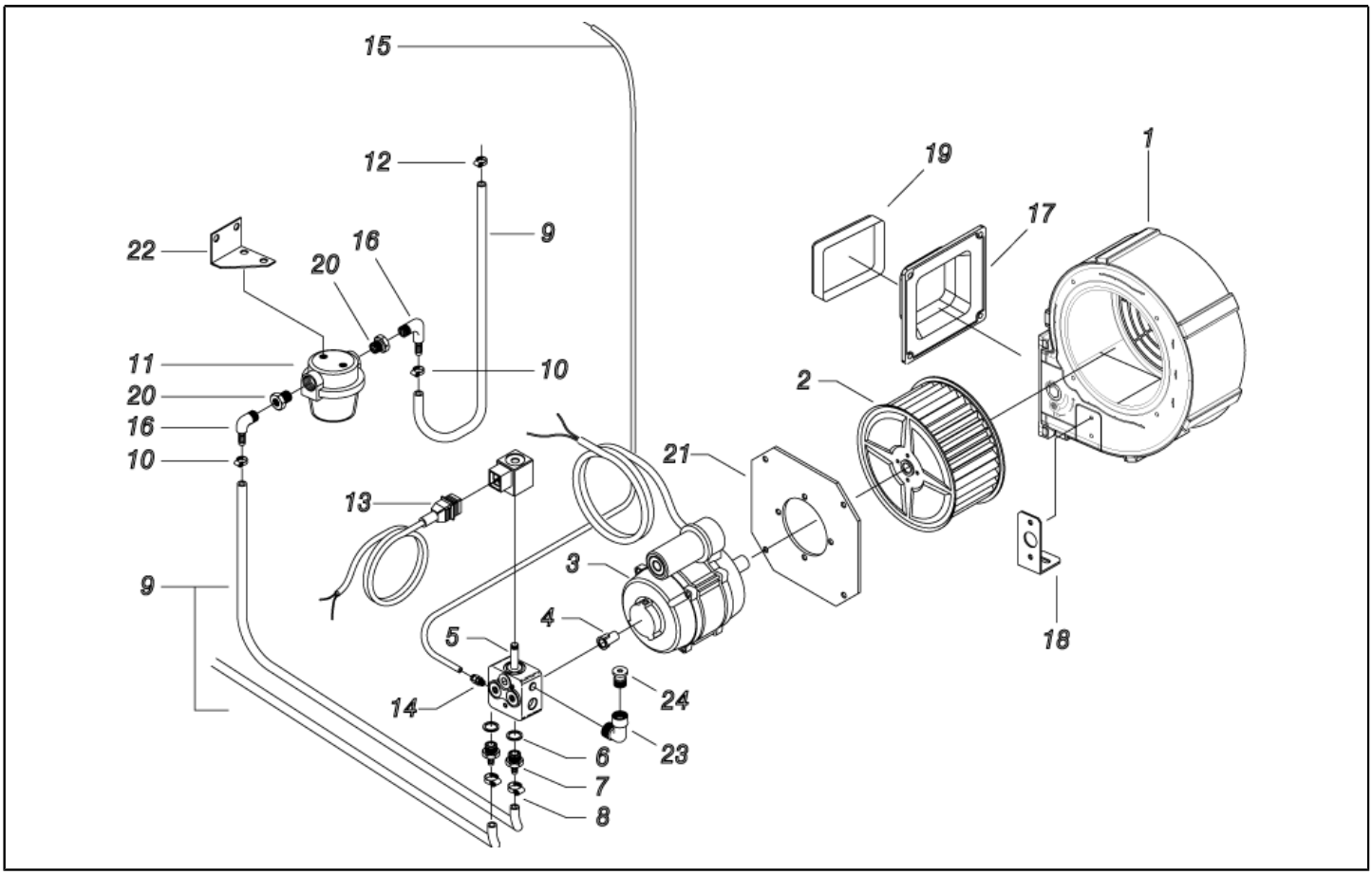

Ref. K	Part N.	Part N. 2	Description	Quantity	Validity From	Validity To
0001	MPVR40010	N/A	SCROLL CB4 -2PZ.CP	1,00		05/11/2015
0001	MPVR40665	N/A	SCROLL CB4 -2PZ.GR.	1,00	06/11/2015	
0002	VEVR34275	N/A	IMPELLER D.160-80 D.12.7 36P B.SX	1,00		
0003	MOMB40002	N/A	BURNER MOTOR 230-50 IP44 110W AO+CNN	1,00		
0004	KTRI36516	N/A	KIT P 18- 9	1,00		
0005	FTCO88927	N/A	FUEL FILTER S.AL	1,00		
0005	PPGS40005	N/A	FUEL PUMP DNF BFA 01L3R2	1,00		
0006	VTRS04931	N/A	WASHER COPPER D.13X19X1.5	2,00		
0007	RCDS00626	N/A	HOSE FITTING 1/4 M D. 5- 7	2,00		
0008	FSVR00427	N/A	CLAMP D. 12 CLIC 66-110	2,00		
0009	TBCO06945	N/A	L.P. HOSE D. 6-12 10BAR C.PRESS	0,85		
0009	TBCO06945	N/A	L.P. HOSE D. 6-12 10BAR C.PRESS	0,50		
0010	FSVR00427	N/A	CLAMP D. 12 CLIC 66-110	1,00		
0010	FSVR00427	N/A	CLAMP D. 12 CLIC 66-110	1,00		
0011	FTCO00789	N/A	FILTER G. 3/8 SP 0.1	1,00		
0012	FSVR00427	N/A	CLAMP D. 12 CLIC 66-110	2,00		
0013	MECB18118	N/A	CABLE DLT L=1.600	1,00		
0014	RCVR14014	N/A	BI-CONE CONNEC. DTT 1/8"M B1 D. 2/ 4 NIK	1,00		
0015	TBCO40046	N/A	DIESEL HOSE INDY/2 D. 4 IX	1,00	01/09/2014	
0015	TBCO49339	N/A	DIESEL HOSE INDY/2 D. 4	1,00		31/08/2014
0016	RCVR89548	N/A	HOSE FITTING "L" 1/8M D.7 OT.NK	2,00		
0017	MPVR40041	N/A	CONVEYOR P176-CB4 PA6 BK.	1,00		
0018	LAFN40210	N/A	BRACKET INDY/2-4W ZC.	1,00		
0019	GUGO20124	N/A	GASKET KSM	1,00	17/07/2020	
0020	RCVR03760	N/A	REDUCTION 3/8-1/8 M/F	2,00		
0021	LAFN10272	N/A	MOTOR PLATE CB 3	1,00		
0022	LAFN40424	N/A	FILTER BRACKET S.INDY/3 ZC.	1,00		
0023	RCVR34780	N/A	ELBOW 1/8" M/F A10	1,00	01/03/2015	
0024	RCVR89230	N/A	CAP G 1/8 M C/O-RING.	1,00	01/03/2015	

Table: ELECTRIC DIAGR. - IDAC40282

Progressive Number: 5

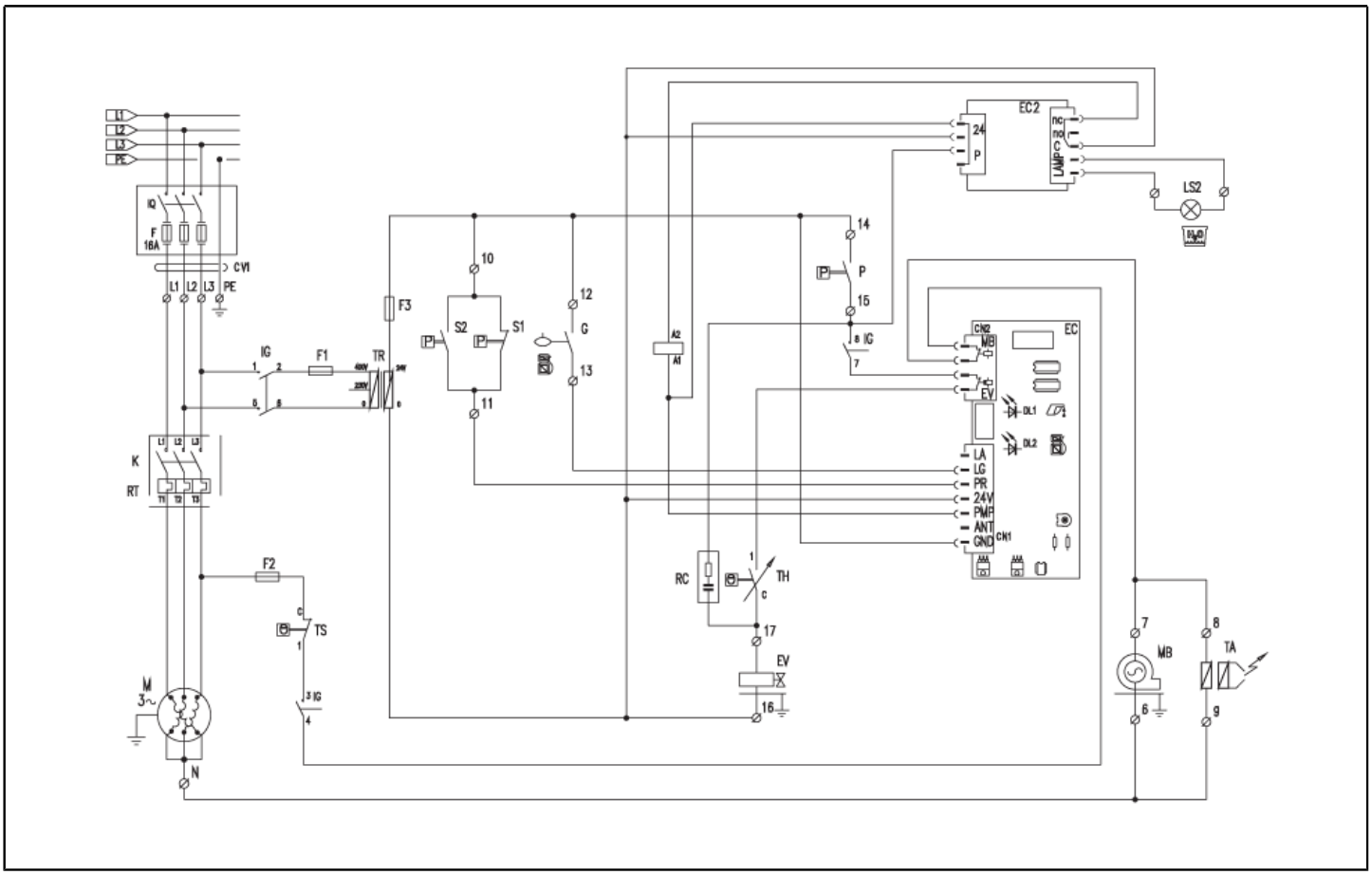

Ref. K	Part N.	Part N. 2	Description	Quantity	Validity From	Validity To
G	MECI40006	N/A	SENSOR LEVEL S1.PML.XD.FPJ FST.	1,00		
K	METT40018	N/A	CONTACTOR SIE 3RT 2024-1AC20 24V	1,00	05/09/2014	
K	METT45025	N/A	CONTACTOR SIE 3RT 1024 1AC20 24V	1,00		04/09/2014
P	MEPF39741	N/A	PRESSURE SWITCH MTM 1/8M NA/NC 25B. MICRO	1,00		31/10/2011
P	MEPF40014	N/A	PRESSURE SWITCH PR 5 1/8M 25BAR RD.	1,00	01/11/2011	21/03/2012
P	MEPF40016	N/A	PRESSURE SWITCH PR 5 1/8M 25BAR RD.L.1300	1,00	22/03/2012	03/07/2022
P	MEPF40059	N/A	PRESSURE SWITCH PS2 G1/8M 25BAR	1,00	04/07/2022	
EC	MECE40004	N/A	PCB P245 T-ST/MP/L.2V.S30'+3"	1,00	22/10/2016	
ES	MECE40004	N/A	PCB P245 T-ST/MP/L.2V.S30'+3"	1,00		21/10/2016
ES	MECE40065	N/A	PCB P245 T-ST/MP/2L.2V.S30'AU	1,00	22/10/2016	
EV	MEBE43704	N/A	COIL DNF 24-50	1,00		
F1	MEVR09010	N/A	FUSE 5X20 0,5A	1,00		
F2	MEVR00237	N/A	FUSE 5X20 3,15A	1,00		
F3	MEVR02824	N/A	FUSE 5X20 1A	1,00		
IG	MECI40017	N/A	COMMUTAT.SWITCH 0-1-2 UN.	1,00		
RC	MECE15873	N/A	RESISTANCE RC 1MF 120 OHM	1,00	01/02/2016	
RT	METT40036	N/A	THERMAL RELAY SIE 3RU2126-4AB0 11-16 A	1,00	05/09/2014	
RT	METT45026	N/A	THERMAL RELAY SIE 3RU1126-4AB0 11-16 A	1,00		04/09/2014
TA	METR88630	N/A	TRANSFORMER 23/240V-5/60HZ 2X26KV TR.	1,00		
TH	METK40006	N/A	THERMOSTAT 0-150° L=1500 S&R	1,00		31/12/2012
TH	METK40011	N/A	THERMOSTAT 0-150° L=1500 F&C	1,00	01/01/2013	
TR	METR46914	N/A	TRANSFORMER 35VA 240-415/24 50/60HZ	1,00		
TS	METK34839	N/A	THERMOSTAT 60°C TU V ST T.F. C.1.5	1,00		31/10/2011
TS	METK40007	N/A	THERMOSTAT 65°C NSP-040 PT RIPR.	1,00	01/11/2011	14/11/2021
TS	METK40025	N/A	THERMOSTAT 65°C SP-140 PT RIPR.	1,00	15/11/2021	
CV1	MECB17414	N/A	CABLE H07 RNF 4X2.5 L=6.500	1,00		
EC2	MECE48676	N/A	PCB LV.H2O 24V	1,00		
LS2	MELF61944	N/A	LAMP D.10 24V ORN.	1,00		
S1,2	MEPF39902	N/A	PRESSURE SWITCH MTM 1/4M NA/NC 25B. MICRO	2,00		31/10/2011
S1,2	MEPF76254	N/A	PRESSURE SWITCH PR 5 1/4M 25BAR	2,00	01/11/2011	31/10/2013
S1,2	MEPF40060	N/A	PRESSURE SWITCH PS2 G1/4M 25BAR	1,00	04/07/2022	
S1,2	MEPF40066	N/A	PRESSURE SWITCH PS2 G1/4M 40BAR	1,00	04/07/2022	
S1,2	MEPF62126	N/A	PRESSURE SWITCH PR 5 1/4M 40BAR	1,00	01/11/2013	03/07/2022
S1,2	MEPF76254	N/A	PRESSURE SWITCH PR 5 1/4M 25BAR	1,00	01/11/2013	03/07/2022

Table: VALVE - VVAZ40033

Progressive Number: 1

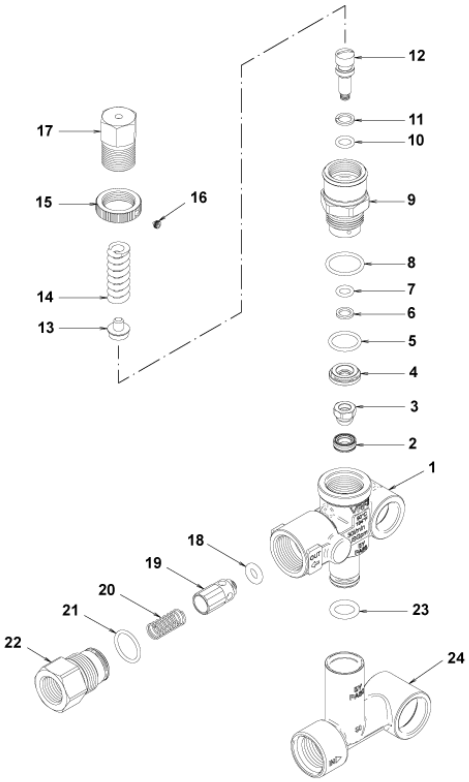

Ref.	K	Part N.	Part N. 2	Description	Quantity	Validity From	Validity To
0001		PVVR40362	N/A	VALVE BODY VRF2	1,00		
0002	S	PVVR40363	N/A	VALVE SEAT MV124 +OR	1,00		
0003	S	PVVR40364	N/A	COUPLING MV124	1,00		
0004	S	PVVR40365	N/A	SPACER MV124	1,00		
0005	S	GUGO12322	N/A	O-RING D. 14 X 1.78 NBR 90SH	1,00		
0006	S	GUVR40072	N/A	ANTI-EXTR.RING D. 6.5X 9.4	1,00		
0007	S	GUGO83861	N/A	O-RING D. 6.07 X 1.78 NBR 90SH	1,00		
0008	S	GUGO24913	N/A	O-RING D. 17.17 X 1.78 NBR 90SH	1,00		
0009	S	PVVR40366	N/A	CONNECTOR VRF2 D.10	1,00		
0010	S	GUGO03500	N/A	O-RING D. 6.75 X 1.78 NBR 70SH	1,00		
0011	S	GUVR40073	N/A	ANTI-EXTR.RING D. 7.1X10 X1.2 TBT	1,00		
0012	S	PVVR40367	N/A	SMALL PISTON D.10 VRF2	1,00		
0013		PVVR40368	N/A	SPRING PLATE MV124 25B	1,00		
0014		MLML40027	N/A	SPRING D. 3.0/6.0 X38.85	1,00		
0015		PVVR40369	N/A	RING NUT MV167.09	1,00		
0016		VTVT89696	N/A	SCREW EI-ST 4X 4 UNI5927 ZC	1,00		
0017		PVVR40370	N/A	CAP VRF2 M18X1	1,00		
0018	S	GUGO46053	N/A	O-RING D. 6 X 3 NBR 90SH	1,00		
0019	S	PVVR40349	N/A	COUPLING VRT3	1,00		
0020	S	MLML40026	N/A	SPRING VRT3	1,00		
0021	S	GUGO12321	N/A	O-RING D. 15.6 X 1.78 NBR 90SH	1,00		
0022		PVVR40350	N/A	CONNECTOR VRT3 G 3/8F	1,00		
0023		GUGO11225	N/A	O-RING D. 10.78 X 2.62 NBR 70SH	1,00		
0024		PVVR40371	N/A	CONNECTOR VRF2.38	1,00		

Table: VALVE - VVAZ40033 Progressive Number: 1

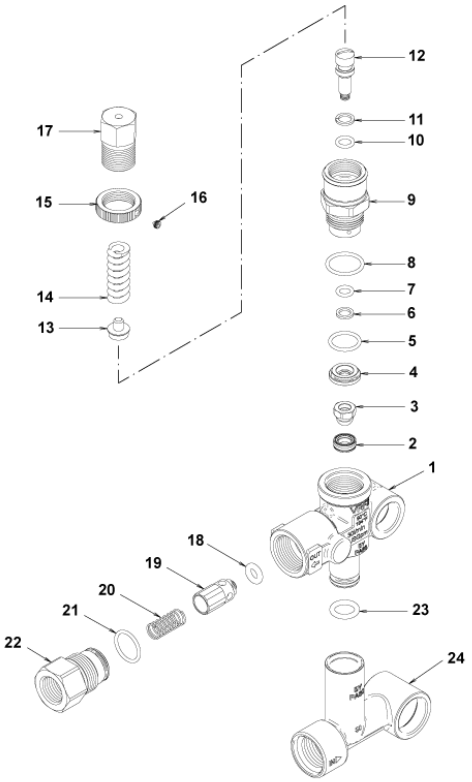

Ref.	Part N.	Part N. 2	Description	Reference
	KTRI40236		KIT P 14-103 VRF2	0002 0003 0004 0005 0006 0007 0008 0009 0010 0011 0012 0018 0019 0020 0021
	KTRI40237		KIT P 14-104 SET GUARNIZIONI	0002 0003 0005 0006 0007 0008 0010 0011 0018 0021

Table: VALVE - VVAZ46720

Progressive Number: 1

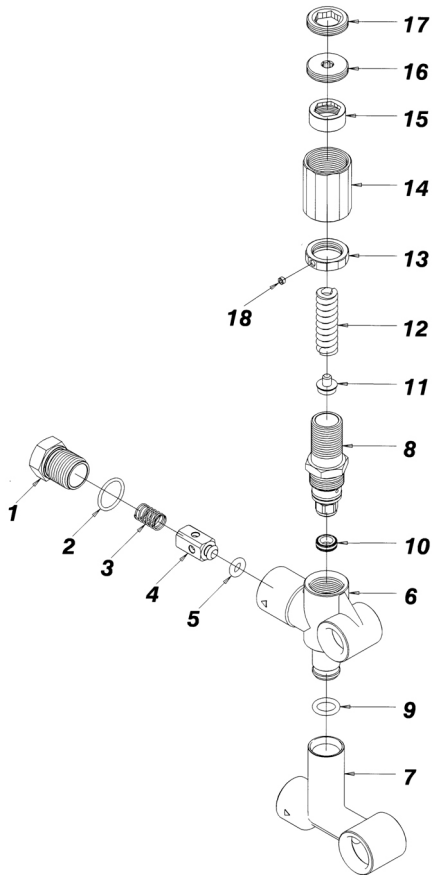

Ref. K	Part N.	Part N. 2	Description	Quantity	Validity From	Validity To
0001	PVVR47977	N/A	CONNECTOR MV625 G 3/8F	1,00		
0002	GUGO01058	N/A	O-RING D. 17.17 X 1.78 NBR 70SH	1,00		
0003	MLML47978	N/A	SPRING MV 625	1,00		
0004	PVVR47979	N/A	PIN MV 625	1,00		
0005	GUGO46053	N/A	O-RING D. 6 X 3 NBR 90SH	1,00		
0006	PVVR47980	N/A	VALVE BODY MV 625	1,00		
0007	PVVR47997	N/A	CONNECTOR MV 625 H.73	1,00		
0008	PVVR47988	N/A	CONNECTOR MV 625 REG.	1,00		
0009	GUGO11225	N/A	O-RING D. 10.78 X 2.62 NBR 70SH	1,00		
0010	PVVR47985	N/A	VALVE SEAT MV 625 + O-RING	1,00		
0011	PVVR47986	N/A	SPRING PLATE MV 625	1,00		
0012	MLML47987	N/A	SPRING D. 3.25X41.1 MV 625	1,00		
0013	PVVR47984	N/A	RING NUT MV 625	1,00		
0014	PVVR47989	N/A	CAP MV 625 REG.	1,00		
0015	PVVR47990	N/A	RING NUT MV 625 REG.	1,00		
0016	PVVR47991	N/A	REGISTER MV 625 REG.	1,00		
0017	PVVR47992	N/A	CLAMP MV 625 REG.	1,00		
0018	VTVT24918	N/A	SCREW EI-ST 4X 4 UNI5927	1,00		

Table: MOTORE EL. - MOTR06345 Progressive Number: 1

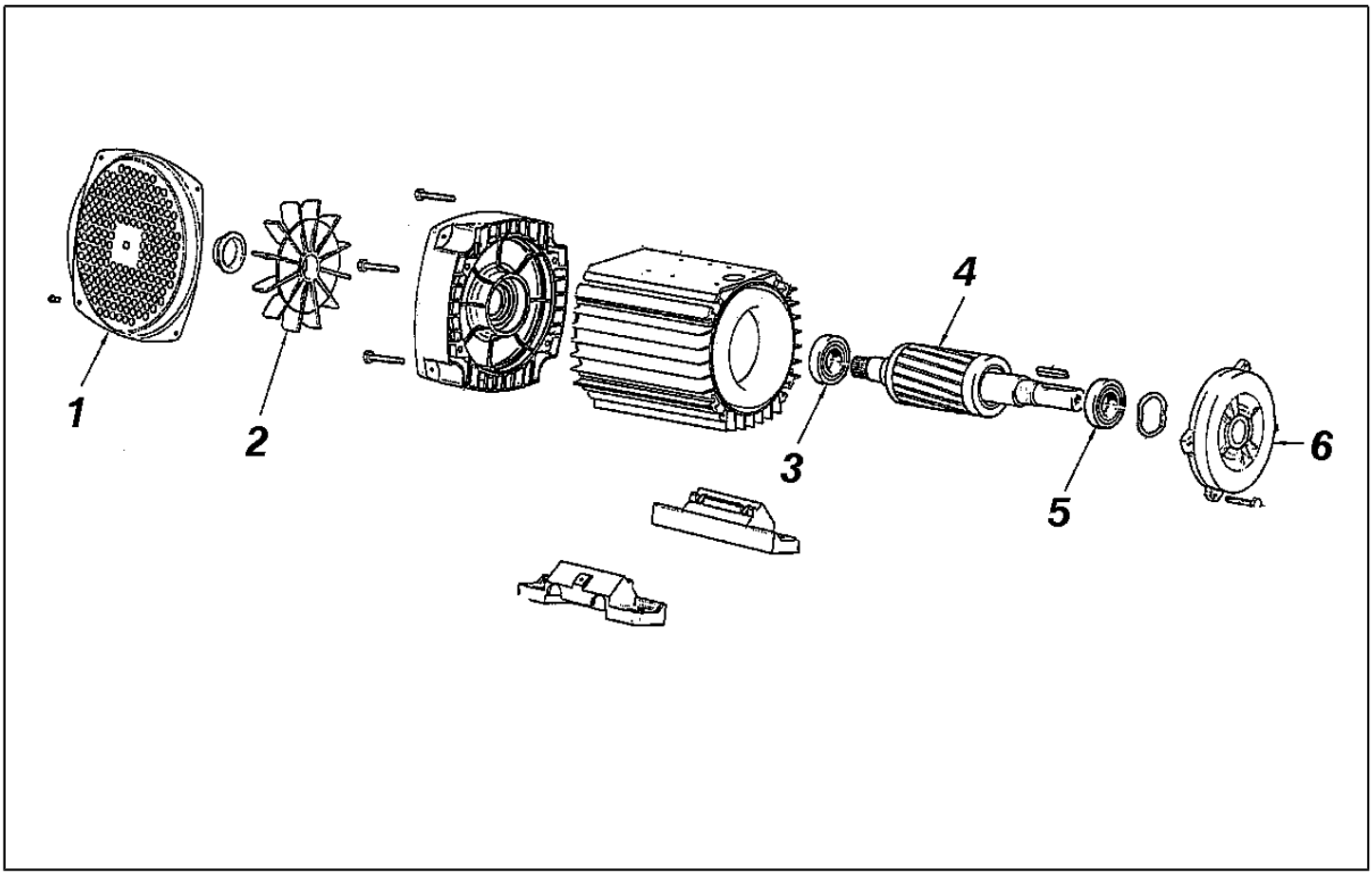

Ref. K	Part N.	Part N. 2	Description	Quantity	Validity From	Validity To
0001	LAFN40007	N/A	PROTECTION ED H.112 EST. LM.BK	1,00		
0002	VEVR48370	N/A	MOTOR FAN H 112 EST. ELD	1,00		
0003	CUVR40002	N/A	BALL BEARING 6306 2Z	1,00		
0004	MORT40001	N/A	EL.MOT. ROTOR 7.5HP T 4P H112 AC EST ED	1,00		
0005	CUVR21250	N/A	BALL BEARING 6008 2Z	1,00		
0006	MFVR48371	N/A	FLANGE MOTOR MEC 112 T. EST. ELD	1,00		

Table: GRIP - IPPR40010

Progressive Number: 1

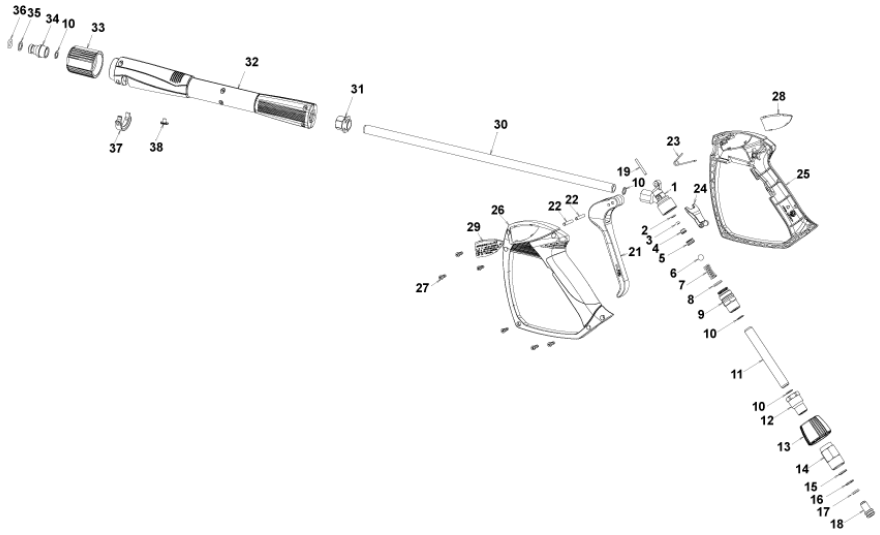

Ref.	K	Part N.	Part N. 2	Description	Quantity	Validity From	Validity To
0001		PVVR40381	N/A	GUN BODY G 5100 G1/4F	1,00		
0002	S	GUVR40074	N/A	ANTI-EXTR.RING D. 3 X 7.4X1.3	1,00		
0003	S	GUGO21835	N/A	O-RING D. 2.84 X 2.62 VIT. 80SH	1,00		
0004		PVVR40382	N/A	PISTON GUIDE G 5100	1,00		
0005	S	PVVR40112	N/A	BALL SEAT G 5000	1,00		
0006	S	SFVR27026	N/A	BALL D.11/32" INX	1,00		
0007		MLML40016	N/A	SPRING D. 9.4 x21.5x1.6 G5000	1,00		
0008		GUGO12322	N/A	O-RING D. 14 X 1.78 NBR 90SH	1,00		
0009		PVVR40383	N/A	CONNECTOR COLL.G5100 1/4F	1,00		
0010		VTRS40017	N/A	WASHER D. 8,2X11,4X1,00	4,00		
0011		PVVR40384	N/A	TUBE G 1/4" L.105	1,00		
0012		RCIN40022	N/A	CONNECTOR SWIV G5100 1/4F	1,00		
0013		MPVR40486	N/A	RING NUT G 5100 SW. GR.	1,00		
0014		RCIN40021	N/A	JOINT SWIV 5100 M22	1,00		
0015	S	GUVR40075	N/A	ANTI-EXTR.RING D. 10 X14X1.5	1,00		
0016	S	GUVR40076	N/A	ANTI-EXTR.RING D. 11.2X14X1.2	1,00		
0017	S	GUGO15295	N/A	O-RING D. 10.82 X 1.78 VIT 75SH	1,00		
0018		PVVR40386	N/A	SCREW SW. G 5100	1,00		
0019		PVVR40387	N/A	SMALL PISTON G 5100	1,00		
0021		MPVR40487	N/A	TRIGGER G 5100-SW	1,00		
0022		VTVR40047	N/A	PLUG D. 4X29	2,00		
0023		MLML40029	N/A	SPRING G 5100	1,00		
0024		MPVR40488	N/A	SAFETY-DEVICE G 5100-SW	1,00		
0025		MPVR40489	N/A	SHELL G 5100-SW DX	1,00		
0026		MPVR40490	N/A	SHELL G 5100-SW SX	1,00		
0027		VTVT40043	N/A	SCREW AF 4X 14 HILO ZN.N	6,00		
0028		MPVR40491	N/A	PLATE G 5100 GR.DX	1,00		
0029		MPVR40492	N/A	PLATE G 5100 GR.SX	1,00		
0030		LCPR40086	N/A	TUBE 1/4 L=420 ZC. 0°	1,00		
0031		MPVR40493	N/A	CONNECTOR G 5100-SW	1,00		
0032		MPVR40494	N/A	PROTECTION P 420 C/AN.	1,00		
0033		PVVR40119	N/A	CONNECTION M22X1,5 IRV G5000	1,00		
0034		RCIN40009	N/A	GUDGEON G 1/4 F IRV G5000	1,00		
0035		GUVR40034	N/A	ANTI-EXTR.RING D. 10 X14	1,00		
0036		GUGO01946	N/A	O-RING D. 9.13 X 2.62 VIT 70SH	1,00		
0037		MPVR40495	N/A	CAP G 5100 REM.	1,00		
0038		MPVR40198	N/A	CAP G 5000	1,00		

Table: GRIP - IPPR40010 Progressive Number: 1

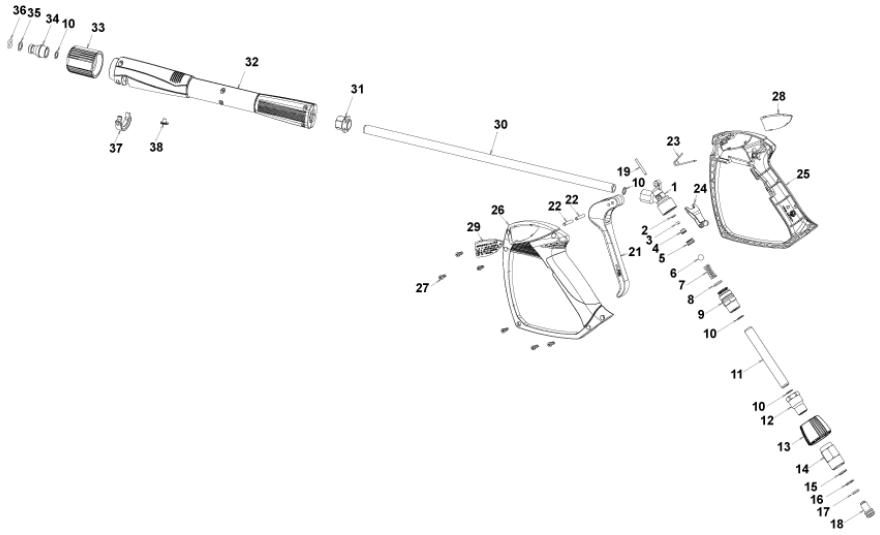

Ref.	Part N.	Part N. 2	Description	Reference
	KTRI40242		KIT P 26- 25 G 5100	0002 0003 0005 0006
	KTRI40243		KIT P 26- 26 SWIVEL G 5100	0015 0016 0017

Table: GRIP - IPPR40020

Progressive Number: 1

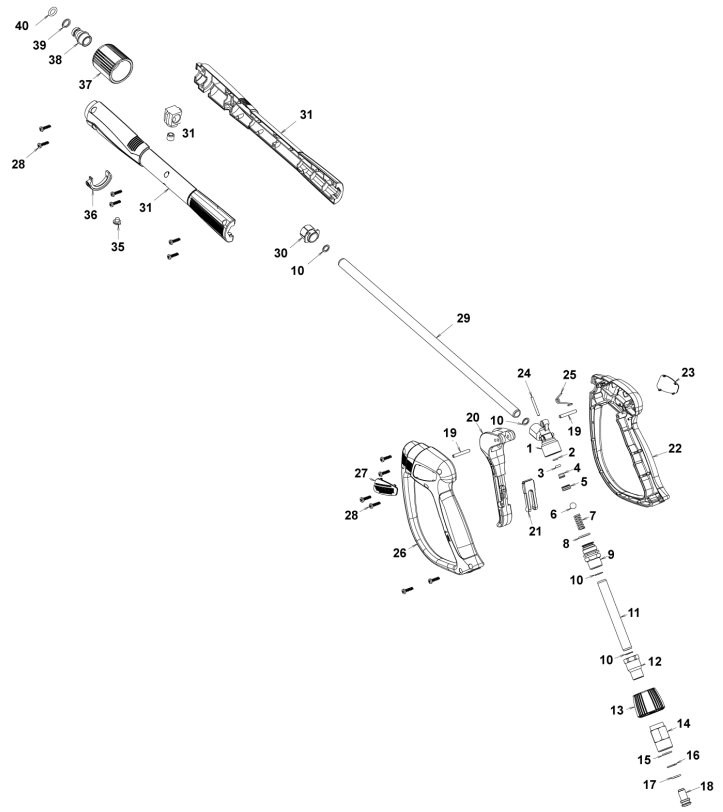

Ref.	K	Part N.	Part N. 2	Description	Quantity	Validity From	Validity To
0001		PVVR40381	N/A	GUN BODY G 5100 G1/4F	1,00		
0002	S	GUVR40074	N/A	ANTI-EXTR.RING D. 3 X 7.4X1.3	1,00		
0003	S	GUGO21835	N/A	O-RING D. 2.84 X 2.62 VIT. 80SH	1,00		
0004		PVVR40382	N/A	PISTON GUIDE G 5100	1,00		
0005	S	PVVR40112	N/A	BALL SEAT G 5000	1,00		
0006	S	SFVR40002	N/A	BALL D.11/32" ALL.GR16	1,00		
0007		MLML40016	N/A	SPRING D. 9.4 x21.5x1.6 G5000	1,00		
0008		GUGO12322	N/A	O-RING D. 14 X 1.78 NBR 90SH	1,00		
0009		PVVR40383	N/A	CONNECTOR COLL.G5100 1/4F	1,00		
0010		VTRS40017	N/A	WASHER D. 8,2X11,4X1,00	4,00		
0011		PVVR40384	N/A	TUBE G 1/4" L.105	1,00		
0012		RCIN40022	N/A	CONNECTOR SWIV G5100 1/4F	1,00		
0013		MPVR40819	N/A	RING NUT G 5100 SW. BK.	1,00		
0014		RCIN40021	N/A	JOINT SWIV 5100 M22	1,00		
0015	S	GUVR40075	N/A	ANTI-EXTR.RING D. 10 X14X1.5	1,00		
0016	S	GUVR40076	N/A	ANTI-EXTR.RING D. 11.2X14X1.2	1,00		
0017	S	GUGO15295	N/A	O-RING D. 10.82 X 1.78 VIT 75SH	1,00		
0018		PVVR40386	N/A	SCREW SW. G 5100	1,00		
0019		VTVR40047	N/A	PLUG D. 4X29	2,00		
0020		MPVR40820	N/A	TRIGGER G 6000-SW	1,00		
0021		MPVR40821	N/A	SAFETY-DEVICE G 6000-SW	1,00		
0022		MPVR40822	N/A	SHELL G 6000-SW DX	1,00		
0023		MPVR40823	N/A	PLATE G 6000 GR.DX	1,00		
0024		PVVR40387	N/A	SMALL PISTON G 5100	1,00		
0025		MLML40029	N/A	SPRING G 5100	1,00		
0026		MPVR40824	N/A	SHELL G 6000-SW SX	1,00		
0027		MPVR40825	N/A	PLATE G 6000 GR.SX	1,00		
0028		VTVT40043	N/A	SCREW AF 4X 14 HILO ZN.N	12,00		
0029		LCPR40086	N/A	TUBE 1/4 L=420 ZC. 0°	1,00		
0030		MPVR40493	N/A	CONNECTOR G 5100-SW	1,00		
0031		MPVR40494	N/A	PROTECTION P 420 C/AN.	1,00		
0035		MPVR40198	N/A	CAP G 5000	1,00		
0036		MPVR40495	N/A	CAP G 5100 REM.	1,00		
0037		PVVR40119	N/A	CONNECTION M22X1,5 IRV G5000	1,00		
0038		RCIN40009	N/A	GUDGEON G 1/4 F IRV G5000	1,00		
0039		GUVR40034	N/A	ANTI-EXTR.RING D. 10 X14	1,00		
0040		GUGO01946	N/A	O-RING D. 9.13 X 2.62 VIT 70SH	1,00		

Table: GRIP - IPPR40020 Progressive Number: 1

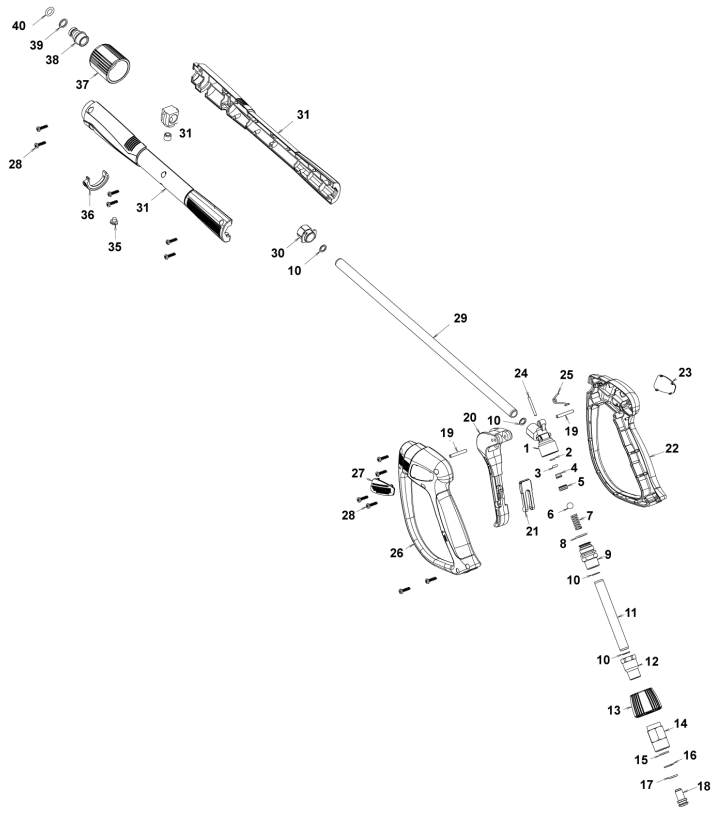

Ref.	Part N.	Part N. 2	Description	Reference
	KTRI40243		KIT P 26- 26 SWIVEL G 5100	0015 0016 0017
	KTRI40414		KIT P 26- 34 G 6000	0002 0003 0005 0006

Table: GRIP - IPPR40025

Progressive Number: 1

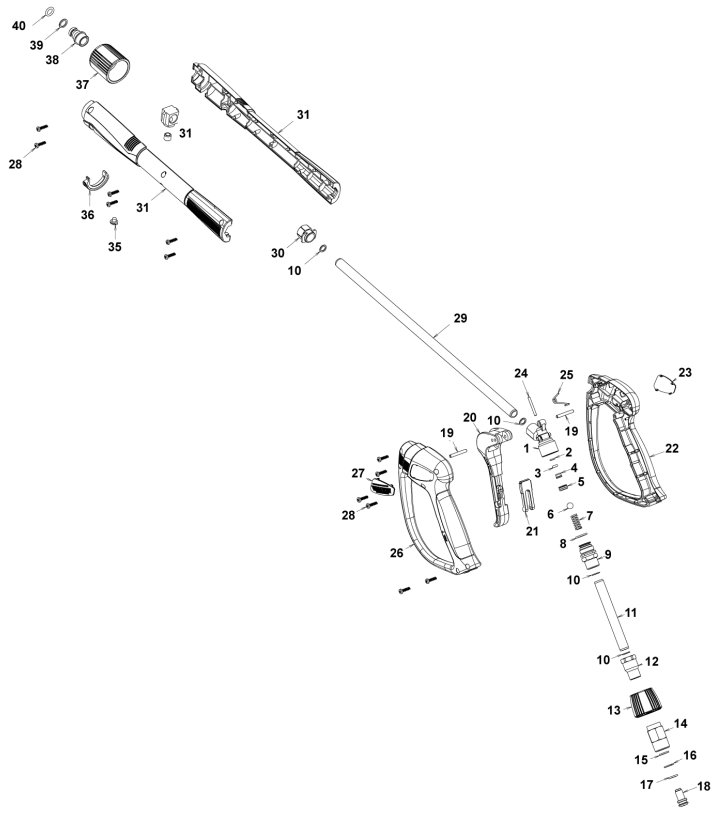

Ref.	K	Part N.	Part N. 2	Description	Quantity	Validity From	Validity To
0001		PVVR40381	N/A	GUN BODY G 5100 G1/4F	1,00		
0002	S	GUVR40074	N/A	ANTI-EXTR.RING D. 3 X 7.4X1.3	1,00		
0003	S	GUGO21835	N/A	O-RING D. 2.84 X 2.62 VIT. 80SH	1,00		
0004		PVVR40382	N/A	PISTON GUIDE G 5100	1,00		
0005	S	PVVR40563	N/A	BALL SEAT AL36 G6000 + OR	1,00		
0006	S	SFVR40004	N/A	BALL D. 5/16" ALL.GR16	1,00		
0007		MLML40047	N/A	SPRING D. 9.4 x23.5x1.6 G6000	1,00		
0008		GUGO12322	N/A	O-RING D. 14 X 1.78 NBR 90SH	1,00		
0009		PVVR40383	N/A	CONNECTOR COLL.G5100 1/4F	1,00		
0010		VTRS40017	N/A	WASHER D. 8,2X11,4X1,00	4,00		
0011		PVVR40384	N/A	TUBE G 1/4" L.105	1,00		
0012		RCIN40022	N/A	CONNECTOR SWIV G5100 1/4F	1,00		
0013		MPVR40967	N/A	RING NUT G 6000 SW. GR.	1,00		
0014		RCIN40021	N/A	JOINT SWIV 5100 M22	1,00		
0015	S	GUVR40075	N/A	ANTI-EXTR.RING D. 10 X14X1.5	1,00		
0016	S	GUVR40076	N/A	ANTI-EXTR.RING D. 11.2X14X1.2	1,00		
0017	S	GUGO15295	N/A	O-RING D. 10.82 X 1.78 VIT 75SH	1,00		
0018		PVVR40386	N/A	SCREW SW. G 5100	1,00		
0019		VTVR40047	N/A	PLUG D. 4X29	2,00		
0020		MPVR40820	N/A	TRIGGER G 6000-SW	1,00		
0021		MPVR40821	N/A	SAFETY-DEVICE G 6000-SW	1,00		
0022		MPVR40822	N/A	SHELL G 6000-SW DX	1,00		
0023		MPVR40968	N/A	PLATE G 6000/2 GR.DX	1,00		
0024		PVVR40564	N/A	SMALL PISTON G 6000 AL36 SP.	1,00		
0025		MLML40029	N/A	SPRING G 5100	1,00		
0026		MPVR40824	N/A	SHELL G 6000-SW SX	1,00		
0027		MPVR40825	N/A	PLATE G 6000 GR.SX	1,00		
0028		VTVT40043	N/A	SCREW AF 4X 14 HILO ZN.N	12,00		
0029		LCPR40181	N/A	TUBE 1/4 L=416 ZC. 0°	1,00		
0030		MPVR40493	N/A	CONNECTOR G 5100-SW	1,00		
0031		MPVR40494	N/A	PROTECTION P 420 C/AN.	1,00		
0035		MPVR40198	N/A	CAP G 5000	1,00		
0036		MPVR40495	N/A	CAP G 5100 REM.	1,00		
0037		PVVR40119	N/A	CONNECTION M22X1,5 IRV G5000	1,00		
0038		RCIN40048	N/A	GUDGEON G 1/4 F IRV G6000/2	1,00		
0039		GUVR40034	N/A	ANTI-EXTR.RING D. 10 X14	1,00		
0040		GUGO63555	N/A	O-RING D. 9,3 X 2,4 VIT 75SH	1,00		

Table: GRIP - IPPR40025 Progressive Number: 1

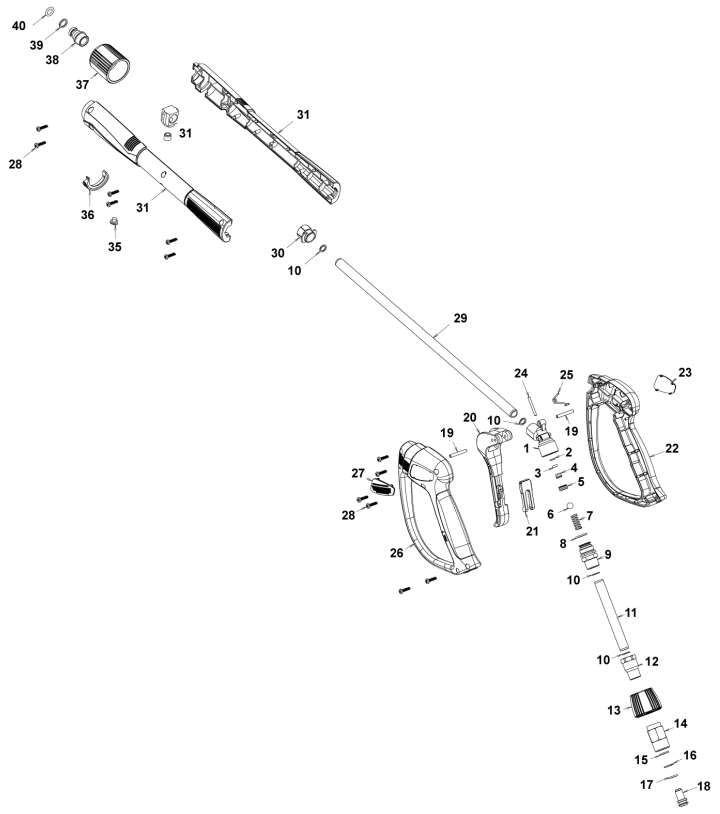

Ref.	Part N.	Part N. 2	Description	Reference
	KTRI40243		KIT P 26- 26 SWIVEL G 5100	0015 0016 0017
	KTRI40513		KIT P 26- 36 G 6000/II	0002 0003 0005 0006

Table: GRIP - IPPR89429 | Progressive Number: 1

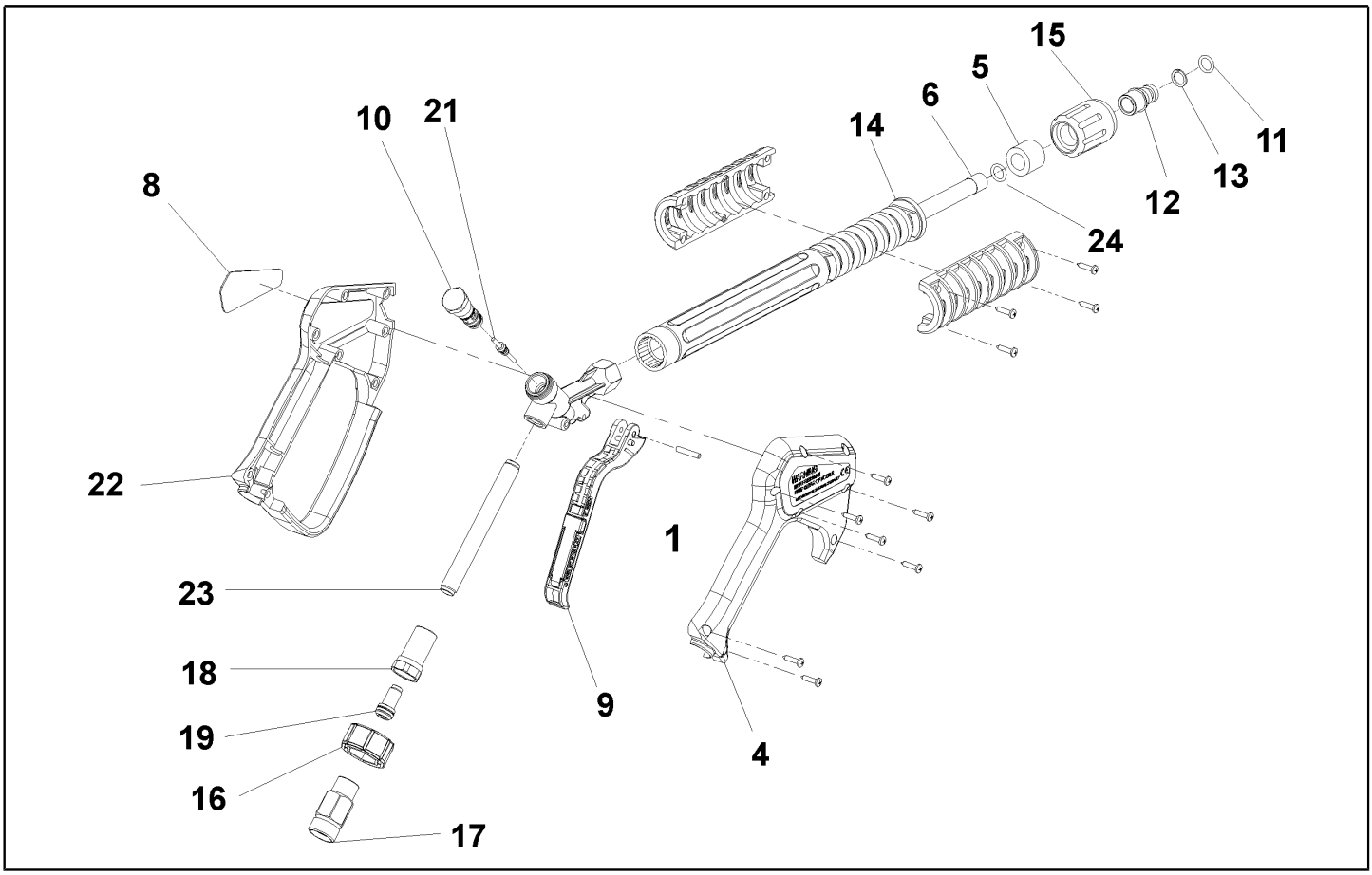

Ref. K	Part N.	Part N. 2	Description	Quantity	Validity From	Validity To
0001	VTVR46568	N/A	PLUG G 4500	1,00		
0004	MPVR46563	N/A	COVER G 4500	1,00		30/04/2008
0004	MPVR40157	N/A	COVER G 4500 2V.	1,00	01/05/2008	
0005	MPVR46572	N/A	SPACER P 330 ST	1,00		
0006	LCPR46571	N/A	TUBE 1/4 L=352 ZC.	1,00		30/04/2008
0006	LCPR40007	N/A	TUBE 1/4 L=352 ZC. 2V.	1,00	01/05/2008	
0008	MPVR46569	N/A	PLATE G 4500 RD.	1,00		
0009	MPVR40057	N/A	TRIGGER G 4500 -SW	1,00		
0010	PVVR40030	N/A	SMALL PISTON TM ST-2300	1,00		
0011	GUGO10384	N/A	O-RING D. 10 X 2.2 VIT 80SH	1,00		
0012	RCVR13030	N/A	GUDGEON G 1/4 F L=31.5	1,00		
0013	GUVR10526	N/A	ANTI-EXTR.RING D.13.9X10.2 C.BZ	1,00		
0014	MPVR46570	N/A	PROTECTION P 330 ST	1,00		
0015	PVVR13445	N/A	CONNECTION M 22X1,5 L=45	1,00		
0016	MPVR40058	N/A	RING NUT G4500 SW.	1,00		
0017	RCIN40001	N/A	JOINT SWIV 4500 3/8"F	1,00		30/04/2008
0017	RCIN40005	N/A	JOINT SWIV 4500 3/8"F 2V.	1,00	01/05/2008	
0018	RCIN31641	N/A	CONNECTOR SWIV 1500 F	1,00		
0019	KTRI31645	N/A	KIT P 26- 14	1,00		
0021	PVVR40031	N/A	ROD ST-2300	1,00		
0022	MPVR46562	N/A	SHELL G 4500	1,00		30/04/2008
0022	MPVR40156	N/A	SHELL G 4500 2V.	1,00	01/05/2008	
0023	PVVR40023	N/A	TUBE G 1/4" M/M P/SW.	1,00		
0024	GUGO27021	N/A	O-RING D. 11 X 2.5 EPD 70SH	1,00	01/05/2008	

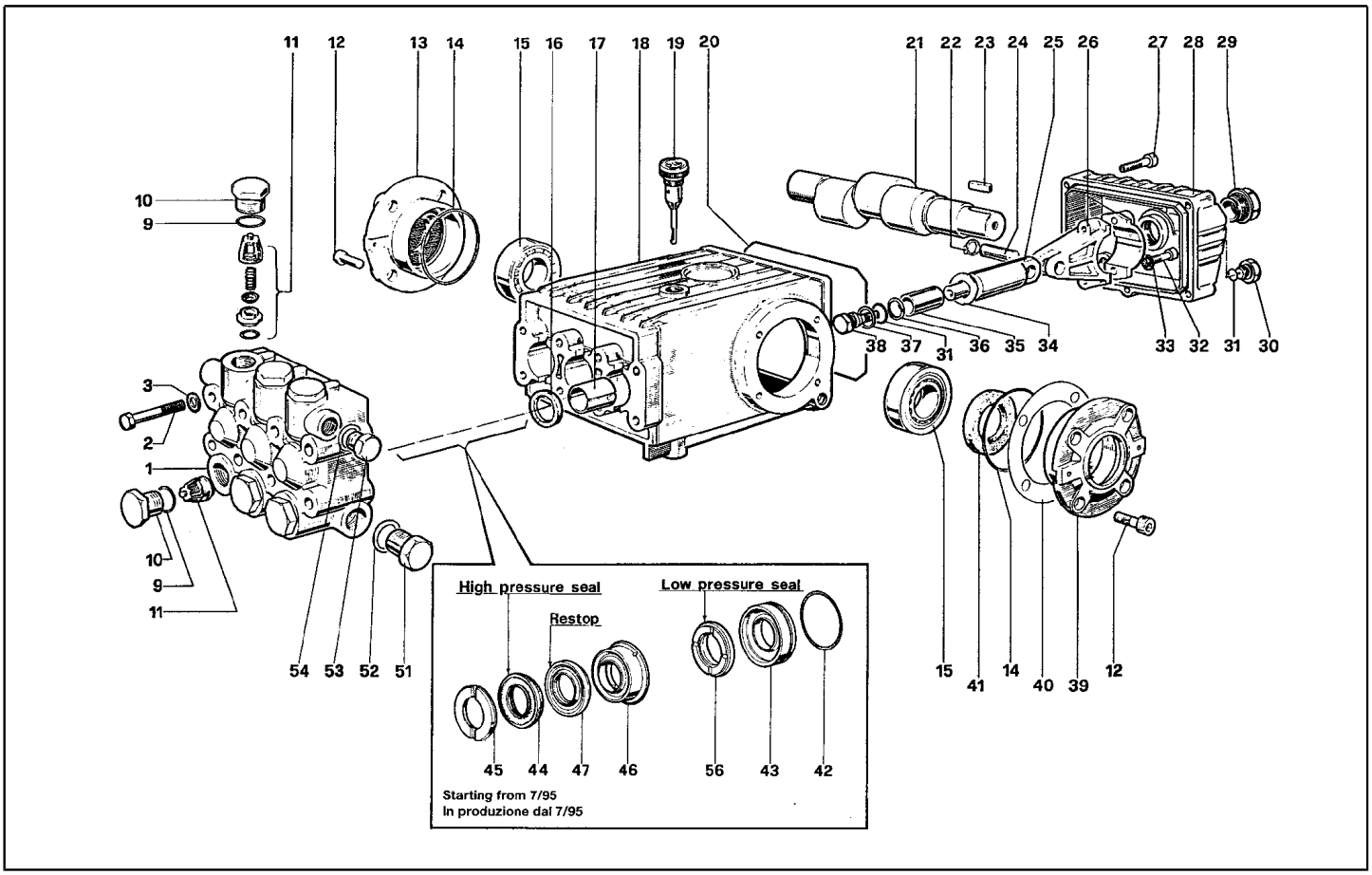

Ref.	K	Part N.	Part N. 2	Description	Quantity	Validity From	Validity To
0001		MFVR01097	N/A	HEAD W 151	1,00		
0002		VTVT01111	N/A	SCREW TE M 8X70 UNI 5737 A.10.9	8,00		
0003		VTRS01072	N/A	WASHER D. 8 TC	8,00		
0009	S	GUGO01033	N/A	O-RING D. 20.24 X 2.62 NBR 90SH	6,00		
0010	S	RCDS01087	N/A	CAP M24X2X16 OTT	6,00		
0011	S	VVAM01104	N/A	VALVE UNIT W 70-151	6,00		
0012		VTVT01118	N/A	SCREW TCEI M 8X16 ZC. UNI 5931	8,00		
0013		MFVR03576	N/A	CRANKASE COVER W151	1,00		
0014		GUGO01041	N/A	O-RING D. 67.95 X 2.62 NBR 70SH	2,00		
0015		CUVR09205	N/A	ROLLER BEARING 32206 A	2,00		
0016	S	GUGO01000	N/A	OIL SEAL 22X 32X 5 NBR70	3,00		
0017		PVVR01011	N/A	BUSHING W 151	3,00		
0018		MFVR01013	N/A	PUMP CRANKCASE W 151	1,00		
0019		PVVR01092	N/A	OIL DIPSTICK W 151	1,00		
0020		GUGO34590	N/A	O-RING D. 133.02 X 2.62 NBR 70SH	1,00		
0021		ALMO41530	N/A	SHAFT TS 1511 USA	1,00		
0022		VTAE14016	N/A	CIRCLIP D. 12 UNI 7435	6,00		
0023		VTVR41531	N/A	KEY 8X 7X35 UNI 6604A	1,00		
0024		PVVR01085	N/A	GUDGEON D.13X35 W151	3,00		
0025		PVVR01029	N/A	PISTON GUIDE W 151	3,00		
0026		BLVR01009	N/A	CONNECTING ROD W 151	3,00		
0027		VTVT01116	N/A	SCREW TCEI 6X30 UNI5931	5,00		
0028		MFVR03582	N/A	CRANKASE COVER W 151 POS	1,00		
0029		PVVR01083	N/A	OIL INDICATOR G 3/4 W70-151	1,00		
0030		RCDS01088	N/A	CAP 1/4X 9 M WW90	1,00		
0031	S	GUGO01036	N/A	O-RING D. 10.82 X 1.78 NBR 70SH	4,00		
0032		VTVT01120	N/A	SCREW TCEI 8X35 UNI5931	6,00		
0033		VTRS14242	N/A	WASHER D. 8.4X13X0.8 UNI7064 SCH	6,00		
0034	S	VTRS01753	N/A	WASHER D.14X28 X0,5	3,00		
0035		PIVR01066	N/A	PISTON D.20X50 W 151	3,00		
0036	S	GUVR00994	N/A	ANTI-EXTR.RING W151	3,00		
0037	S	VTRS01076	N/A	WASHER D.14X18,5X0,5	3,00		
0038	S	PVVR01107	N/A	PISTON BOLT IP W151	3,00		
0039		MFVR03583	N/A	CRANKASE COVER W151	1,00		
0040		PVVR01016	N/A	THICKNESS 0,1 W 151	2,00		
0041	S	GUGO01003	N/A	OIL SEAL 30X 55X 7 NBR70	1,00		
0042	S	GUGO01042	N/A	O-RING D. 34.6 X 1.78 NBR 70SH	3,00		
0043	S	PVVR00977	N/A	PACKING RETAIN. W151	3,00		
0044	S	GUVR00981	N/A	PACKING W151	3,00		
0045	S	PVVR00985	N/A	HEAD RING W151	3,00		
0046	S	PVVR34589	N/A	INTERMED. RING W 151 D. 20	3,00		
0047	S	GUVR34587	N/A	PACKING D. 20 RESTOP	3,00		
0051		RCDS01091	N/A	CAP 1/2X10 M	1,00		
0052		VTRS01075	N/A	WASHER D.21,5X27 ALL	1,00		

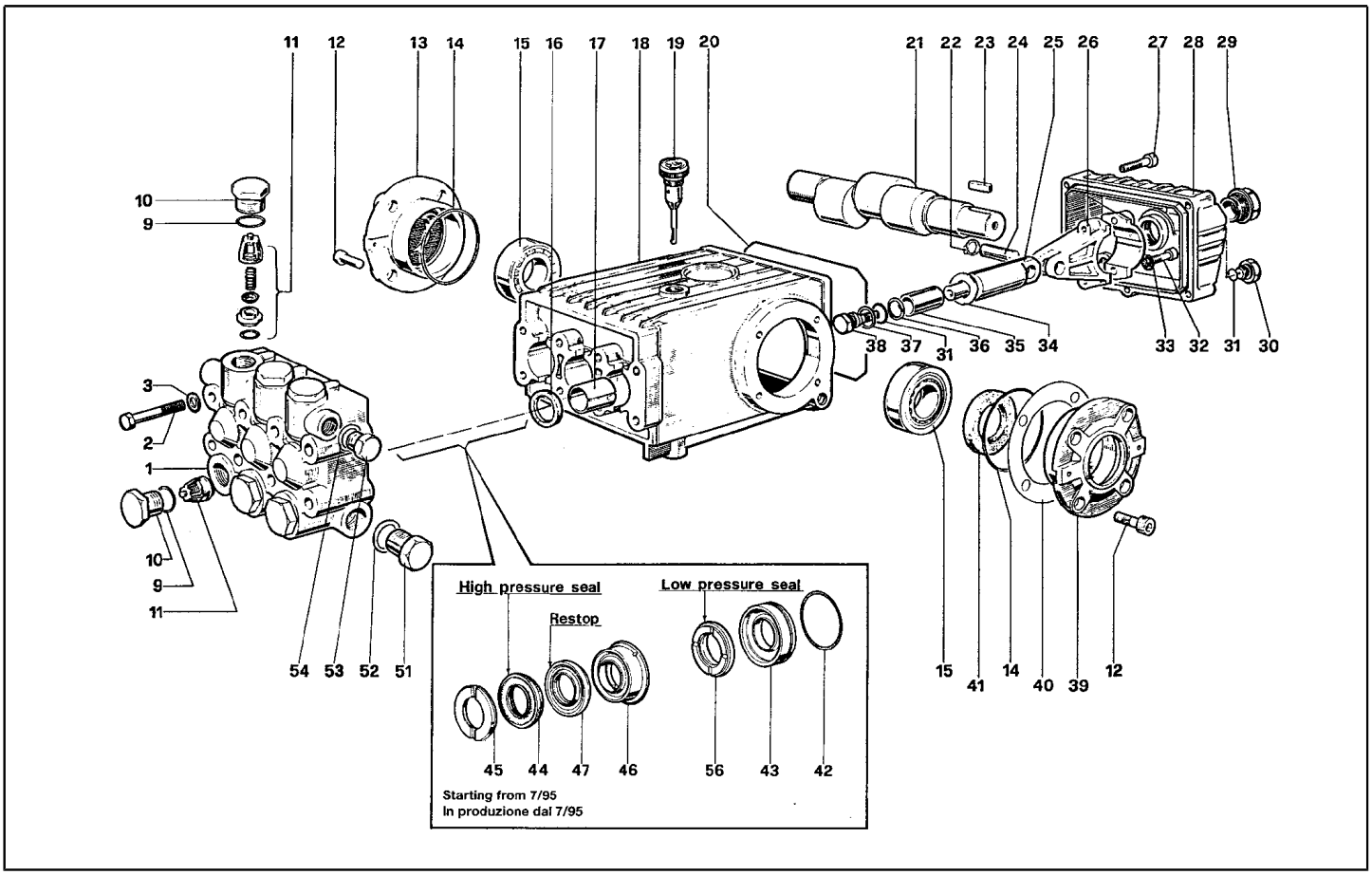

Ref.	K	Part N.	Part N. 2	Description	Quantity	Validity From	Validity To
0053		RCDS01090	N/A	CAP 3/8X13 M WW90	1,00		
0054		VTRS01074	N/A	WASHER D.17,05X22,3 X1,5	1,00		
0056	S	GUVR34585	N/A	PACKING W 151 L.P.	3,00		

Table: PUMP - PPAP42031 Progressive Number: 1

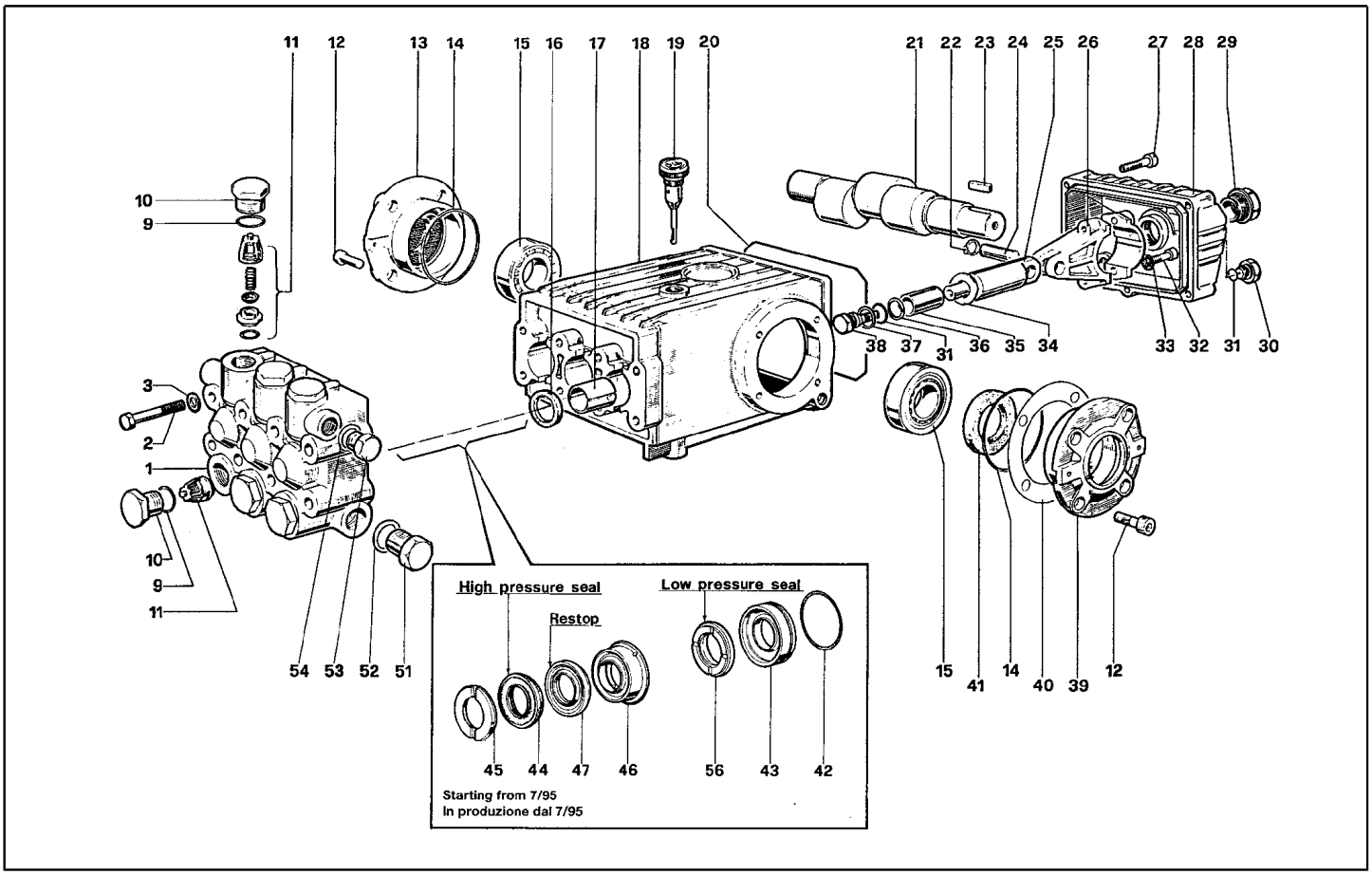

Ref.	Part N.	Part N. 2	Description	Reference
	KTRI17795		KIT P 4	0009 0010
	KTRI17859		KIT P 1	0011
	KTRI17860		KIT P 15- 2	0016
	KTRI17793		KIT P 6	0031 0034 0036 0037 0038
	KTRI14900		KIT P 15- 3	0041
	KTRI14901		KIT P 10	0042 0043
	KTRI18579		KIT P 28	0042 0043 0044 0045 0046 0047 0056
	KTRI18574		KIT P 7	0045
	KTRI36927		KIT P 69	0044 0047 0056
	KTRI35429		KIT P 71	0046 0047

Table: SANDBLASTER - LCPR14859 Progressive Number: 1

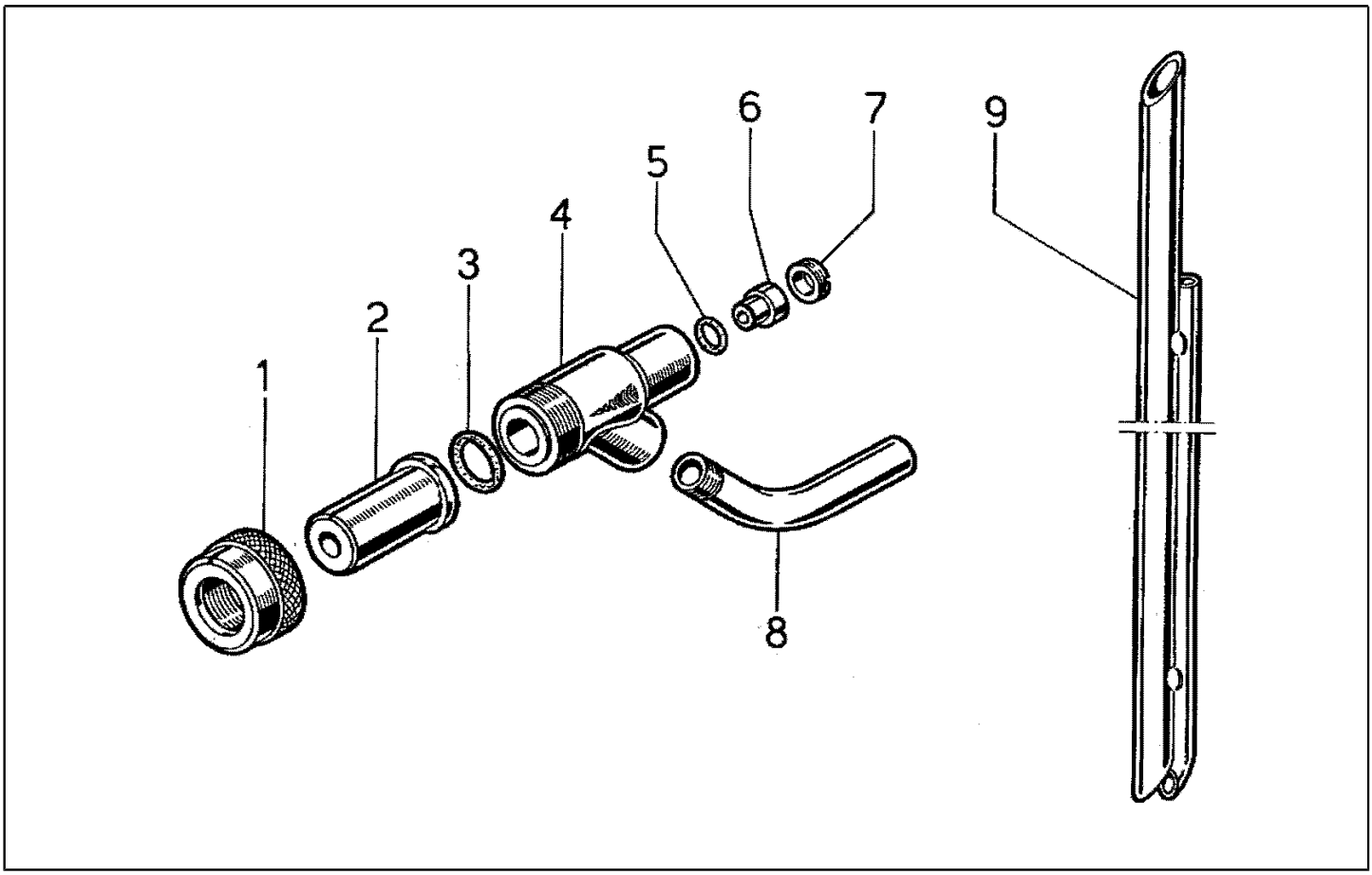

Ref. K	Part N.	Part N. 2	Description	Quantity	Validity From	Validity To
0001	PVVR09932	N/A	CONNECTION M27X1,5	1,00		
0002	PVVR11403	N/A	NOZZLE HOLDER WIDIA	1,00		
0003	GUGO15198	N/A	O-RING D. 13.10 X 2.62 NBR 70SH	1,00		
0004	PVVR19261	N/A	CENTRAL BODY	1,00		
0005	GUGO03500	N/A	O-RING D. 6.75 X 1.78 NBR 70SH	1,00		
0006	UGLN26569	N/A	NOZZLE D. 1.5 TS ARW	1,00		
0007	PVVR26571	N/A	RING NUT G1/4 TS	1,00		
0008	PVVR09938	N/A	CONNECTOR G1/4	1,00		
0009	LAFN29191	N/A	PROBE HOBBY REG.	1,00		
9999	LCPR12976	N/A	EXTENSION P 70	1,00		
9999	TBBP10349	N/A	DETERGENT HOSE D.12-18	4,00		